Appendix IV. Intervals at which instantaneous or "snapshot" counts of flying birds should be conducted within a ten-minute observation period, within a 300m transect from a moving platform.

Platform's speed (knots)	Interval between counts (minutes)
4	2.5
5	2.0
6-8	1.5
9-12	1.0
13-19	0.5

Appendix III. Estimating a 300m distance at sea using a slide calliper (formula derived by J. Chardine, based on Heinemann 1981).

The 300m distance from the observation point can be estimated using a slide calliper and the following equation:

$$d_h = 1000\frac{(ah3838\sqrt{h}) - ahd}{h^2 + 3838d\sqrt{h}}$$

e.g. if $a = 0.714$ m, $h = 15$ m, and $d = 300$ m

then $d_h = 35.0$ mm

where:

d_h = distance down from horizon down (mm)
a = distance between the observer's eye and the calliper when observer's arm is fully out-stretched (m)
h = height of the observer's eye above the water at the observation point (m)
d = distance to be estimated (m; in this case, the width of the transect or semi-circle, or 300m)

First, calculate d_h to obtain the amount that the calliper should be opened at for a 300m transect or semi-circle. Once this amount is known, hold the calliper vertically at arm's length, opened to the appropriate interval, with the tip of the upper jaw in line to the horizon. The tip of the lower jaw of the calliper is now in line with a distance 300m from the platform, marking the far side of the transect or semi-circle.

Visual illustration of example above:

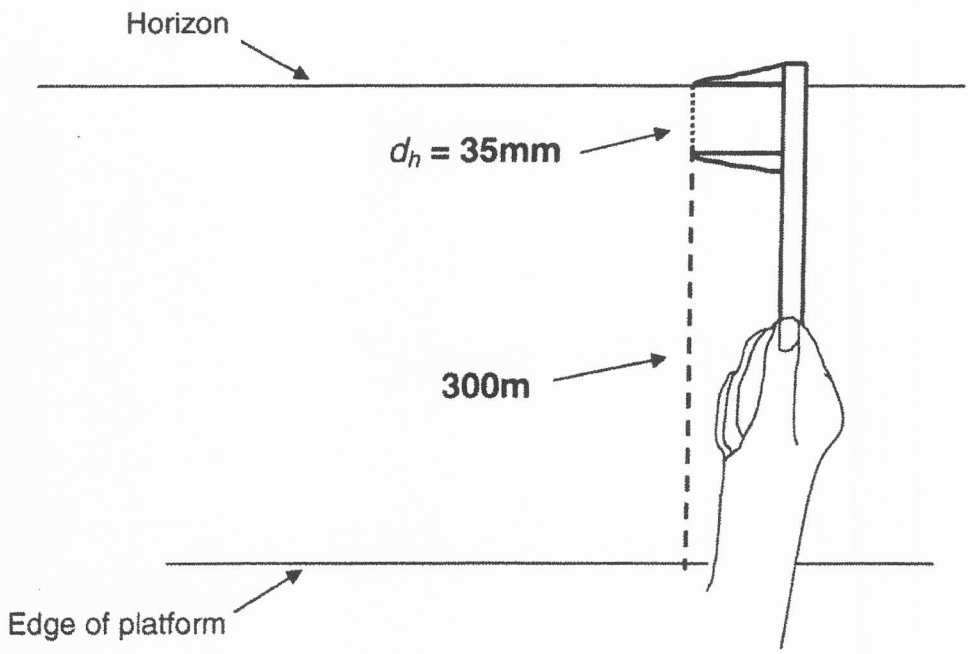

Appendix II. Example of survey using a 180° scan, covering a semi-circle of 300m radius from a stationary platform. Record birds observed within this area, whether flying or on the water, as a priority. Record all birds seen outside the 300m semi-circle as well, but note them as "not in semi-circle".

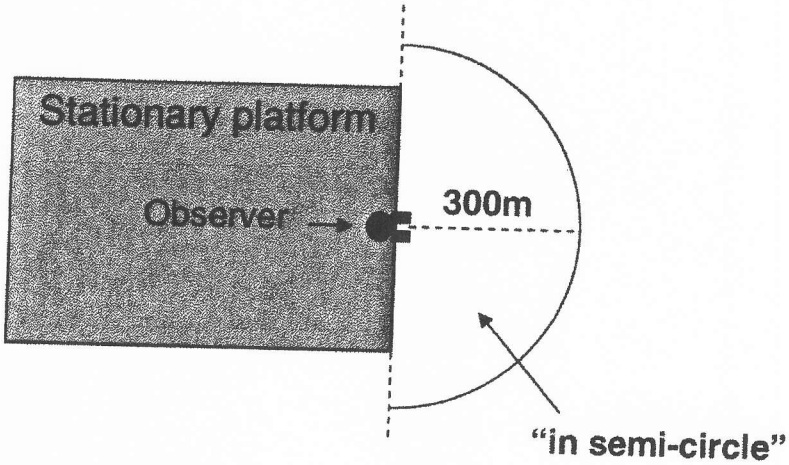

Appendix I. Example of survey using a 90° scan, covering a 300m transect from a moving platform. Record birds that are observed within this transect, whether flying or on the water, as a priority. Record all birds seen outside the transect, if this does not affect observations within the transect, and note them as "not in transect".

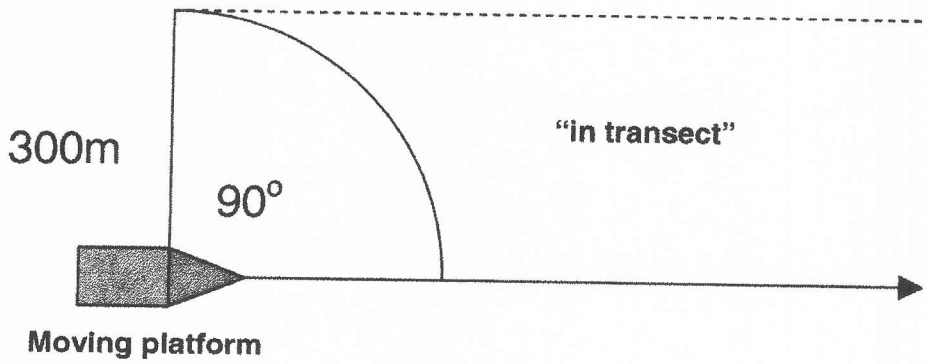

8) Compass direction (***N***, ***NE***, ***E***, ***SE***, ***S***, ***SW***, ***W***, or ***NW***) in which birds in flight are heading, if not associated with platform.
8) Age (***J***, ***I***, or ***A***)
9) Plumage of adults (***B***, ***NB***, and/or ***M***)
10) Sex (***M*** or ***F***)

See Appendix VII for detailed notes on completing each field.

Grouping observations. Record groups of birds in the same data row if they behave as a group and have the same morphological and behavioural characteristics (e.g., all adults in breeding plumage flying in the same direction; see example in Appendix XII). Record other individuals from the group that have different characteristics (e.g., juveniles) in the next row, and associate this record with the previous one by drawing a line that links the two rows (see example in Appendix XII).

4. LIST OF CONSULTED REFERENCES

Anon. 2000. Seabirds Identification Guide: seabirds monitoring program for Terra Nova development drilling phase. Prepared for Terra Nova Development by Jacques Whitford Environment Limited.

Baillie, S.M., Robertson, G.J., Wiese, F.K., and Williams, U.P. 2005. Seabird data collected by the Grand Banks offshore hydrocarbon industry 1999-2002: results, limitations and suggestions for improvement. Canadian Wildlife Service Technical Report Series No. 434. Atlantic Region. v + 47 pp.

Camphuysen, C.J. and Garthe, S. 2004. Recording foraging seabirds at sea: standardised recording and coding of foraging behaviour and multi-species foraging associations. Atlantic Seabirds 6: 1-32.

Heinemann, D. 1981. A range finder for pelagic bird censusing. Journal of Wildlife Management 45: 489-493.

Komdeur, J., Bertelsen, J., and Cracknell, G. 1992. Manual for aeroplane and ship surveys of waterfowl and seabirds. IWRB Special Publication No. 19. National Environmental Research Institute, Department of Wildlife Ecology, Kalø, Denmark.

Montevecchi, W.A. and Burke, C. 2002. Surveys of marine birds and mammals in Newfoundland waters from offshore support vessels and ships of opportunity. Report prepared for Environmental Studies Research Fund Management Board of Canada. Memorial University of Newfoundland, St. John's.

Tasker, M.L., Hope Jones, P., Dixon, T., and Blake, B.F. 1984. Counting seabirds at sea from ships: a review of methods employed and a suggestion for a standardized approach. Auk 101: 567-577.

Tasker, M.L., Hope Jones, P., Blake, B.F., Dixon, T.J., and Wallis, A.W. 1986. Seabirds associated with oil production platforms in the North Sea. Ringing and Migration 7: 7-14.

Delineated survey area. Conduct surveys by scanning at a 180° angle, limiting observations to a semi-circle around the observer, with a radius of 300m from the edge of the platform (see Appendix II). Sweep the area only once per scan, from one side to the other, and systematically record all birds on water and in flight within the area at that time.

Estimating "in observation" area. Estimate the 300m distance prior to beginning observations. You can base your estimate on the known width of the platform or fixed structure, or by using a slide calliper (see Appendix III).

Frequency of scans. Scan the same area once every 2 hours from morning to evening, regardless if birds are present or not.

Snapshot counts of birds. Scan the area once per survey. If the stationary platform is high (e.g., an oil production platform), use binoculars to count and identify birds present in the air or on the water. Use a telescope to confirm species identification and other details, such as moult, age, carrying fish, etc. If the stationary platform is relatively low (e.g., a supply vessel on stand-by), scan the area by eye to count and identify birds, and confirm details using binoculars.

Birds on water and in flight. Estimate the distance that observed birds are from the base of the platform (see Appendix VII for distance categories).

Poor visibility. When a scheduled scan cannot be conducted because visibility is poor due to rain or fog (i.e., when the entire width of the 300m semi-circle is not visible), fill in the Observation Period Information, and write in the notes why the scan was not conducted.

Null observation periods. Record "No birds observed" when no birds were detected during a scan, as this type of information is also important.

3.2. Recording information related to each scan

Scan information. It is important to fill in all the fields under the heading "Scan Information" of the data sheet at the beginning of each scan. **See Appendix VI for detailed notes on completing each field.**

Bird information. Use appropriate codes to record the following information (in this order of priority) for all birds observed during the period, whether within or outside the semi-circle:

1) Species (see Appendix VIII for list of species code)
2) Number of individuals
3) Flying (***F***) or on the water (***W***)
4) In semi-circle? ***Y*** or ***N***
5) Distance from platform using categories (see Appendix VII for distance categories)
6) Association (see Appendix X for association codes)
7) Behaviour (see Appendix X for behaviour codes)

2.2. Recording information related to each observation period

Observation period information. It is important to fill in all the fields under the heading "Observation period information" of the data sheet at the beginning of every ten-minute observation period. **See Appendix V for detailed notes on filling in each field.**

Bird information. Use appropriate codes to record the following information (in this order of priority) for all birds observed during the period, whether within or outside the transect:

1) Species (see Appendix VIII for list of species code)
2) Number of individuals
3) Flying (***F***) or on the water (***W***)
4) In transect? ***Y*** or ***N***
5) Distance from vessel using categories (see Appendix VII for distance codes)
6) Association (see Appendix X for association codes)
7) Behaviour (see Appendix X for behaviour codes)
8) Compass direction (***N***, ***NE***, ***E***, ***SE***, ***S***, ***SW***, ***W***, or ***NW***) in which birds in flight are heading, if they are not associated with platform.
8) Age (***J***, ***I***, or ***A***)
9) Plumage of adults (***B***, ***NB***, and/or ***M***)
10) Sex (***M*** or ***F***)

See Appendix VII for detailed notes on filling in each field.

Grouping observations. Record groups of birds in the same data row, if they behave as a group and have the same morphological and behavioural characteristics (e.g., all adults in breeding plumage flying in the same direction; see example in Appendix XI). Record other individuals from the group that have different characteristics (e.g., juveniles) in the next row, and associate this record with the previous one by drawing a line that links the two rows (see example in Appendix XI.3f).

3. SEABIRD SURVEY PROTOCOL FOR STATIONARY PLATFORMS

3.1. General methodology

The scan method. Observations from stationary platforms are conducted using instantaneous counts, or "snapshots" of birds within an area that is scanned at regular intervals throughout the day. The length of the survey will depend on the number of birds present at the time of the scan, and may last only a few seconds if no birds are present.

Observer position. Whenever possible, conduct scans from a position outdoors, as close to the edge of the platform as permitted. A position near the edge will increase the detection rates of birds, especially for individuals that use the waters at the base of the platform. Conduct scans at the same location each time, and ensure that other observers use the same location.

Ten-minute periods. A survey consists of a series of ten-minute observation periods, which are exclusively dedicated to detecting birds at sea. Only take breaks at the end of a ten-minute period. Conduct as many consecutive ten-minute observation periods as possible, regardless if birds are present or not, and try to ensure consistent coverage throughout the day.

Continuous counts of birds. Scan the transect continuously by eye, to count and identify birds present in air or on water. Use binoculars to confirm the species identification, and other details, such as age, moult, carrying fish, etc. Scan ahead regularly (e.g., every minute) to detect birds that may dive as the platform approaches. If large concentrations of birds in the transect fly off as the moving platform approaches, use binoculars to help count individuals, and record these as being on water.

Birds on water. Continuously record all birds observed on the sea surface throughout the ten-minute period, and estimate their distance perpendicular from the mid-line of the platform (see Appendix VII for distance categories). Leach's Storm-petrels observed tapping the surface of the water with feet and bill, and Northern Gannets diving into the sea, should be recorded as being on water with the behaviour code that indicates feeding (Appendix X).

Birds in flight. Flying birds are not recorded continuously throughout the 10-minute period, as this would overestimate bird density. Instead, record flying birds using instantaneous counts, or "snapshots", at regular intervals throughout the observation period. The number of snapshots conducted will depend on the speed of the platform (see Appendix IV for time intervals between snapshots). For example, if the platform is moving at a speed of 10 knots, snapshots will occur every minute for the 10-minute observation period. During each snapshot, record flying birds as "in transect" only if they are above the 300m strip transect AND observed when the snapshot is being done. If possible, estimate the distance of the flying bird *when it was first observed* (see Appendix VII for distance categories). Record all other flying birds that are seen outside of the transect or between snapshot intervals as "not in transect", and estimate their distance at the time they were first observed. See Appendix XI for an example of how to record data for birds on water and in flight.

Minimum requirements. Only conduct observations when the platform is travelling at a minimum speed of 4 knots (7.4 km/h) and a maximum of 19 knots (35.2 km/h).

Poor visibility. When a scheduled observation cannot be conducted because visibility is poor due to rain or fog (i.e., when the entire width of the 300m transect is not visible), fill in the Observation Period Information, and write in the notes section why the observation was not conducted.

Null observation periods. Record "No birds observed" when no birds were detected during a ten-minute period, as this type of information is also important.

1. INTRODUCTION

Protocol objectives. The main objective of this protocol is to ensure that observers conducting surveys at sea are recording data in a consistent, unbiased fashion that permit subsequent conversion into seabird densities. Such data are important for the monitoring of seabird abundance and species composition over space and time, which in turn help support future environmental assessments, and assess potential impacts of the hydrocarbon industry, as well as chronic ship-based oil pollution. This protocol is tailored after current methods used elsewhere in the world, making these data comparable to datasets of other geographic areas. Two protocols are presented here for surveys conducted from two types of observation platforms: moving (e.g., fishing fleet, seismic vessel) and stationary (e.g., oil production rig, supply vessel on stand-by).

Observer requirements. These survey protocols should be used by observers with some level of experience conducting pelagic seabird surveys to ensure that appropriate information is collected in a consistent fashion for maximum value. Observers should have adequate training in seabird identification, and in methods for conducting and recording observations in a standardized way. Observers should also be dedicated to conducting surveys at sea while on the platform, and should not have other potentially conflicting duties. Less experienced observers, and those tasked with multiple duties who might have limited time to conduct seabird observations, are encouraged to follow the modified version of this protocol that requires less experience and focussed attention *(Standardized Protocols for Seabird Surveys from Moving and Stationary Platforms for the Hydrocarbon Industry*, CWS publication).

2. SEABIRD SURVEY PROTOCOL FROM MOVING PLATFORMS

2.1. General methodology

Observer position. Whenever possible, conduct observations at a high location near the front of the platform. A high position facing the bow of the vessel (e.g., on the bridge) increases the detection rates of birds, especially species that dive to escape, such as auks. If weather permits, observations can be conducted from a position outdoors.

The transect method. Conduct surveys while looking forward from the moving platform, scanning at a 90° angle from either the port or starboard side, limiting observations to a transect band 300m wide from the side of the platform (Appendix I). This band is referred to as the area "in transect".

Estimating transect width. Estimate the width of the 300m transect prior to beginning observations. This can be done by practicing with a buoy towed on a 300m rope behind a moving platform, using a range finder on a stationary object (e.g., a buoy) while the platform is docked, or using a slide calliper (Appendix III).