DocuSign Envelope ID: 7C0154C2-2B32-451B-86B8-66EE45FBA119

| ExxonMobil Canada Properties | HEBRON PROJECT | Hebron RQF# | RQF-HEB-099 |
|---|---|---|---|
| REGULATORY QUERY FORM | | DATE | December 2, 2020 |
| TITLE: Confined Space Entry Life Line Use | | | |

| RQF CATEGORY | | SCOPE |
|---|---|---|
| ☐ Request for regulatory clarification | ☐GBS | ☐Commissioning |
| ☐ Application for exemption | ☒Topsides | ☒Operations |
| ☒ Application for use of alternative, codes, standards or methods | ☐OLS | ☐Other |
| | ☐Drilling | Specify: |
| ☐ Clarification, Exemption or Alternative against a Regulatory Guideline only | ☐Installation | |

| Regulatory Approvals Required | CA Concurrence Required |
|---|---|
| ☒ C-NLOPB | ☐ Yes |
| | ☒ No |

## 1. REGULATION(s)

**Canada – Newfoundland and Labrador Offshore Marine Installations and Structures Occupational Health And Safety Transitional Regulations – Part 11, Section 161 (c)**

161. If the conditions in a confined space or the nature of the work to be performed in a confined space are such that the requirements of paragraphs 160(1)(a), (c), (e) and (f) cannot be complied with, the following procedures apply:

(a) a qualified person trained in the procedures referred to in subsection 160(2) must be
- (i) in attendance outside the confined space,
- (ii) in communication with the person inside the confined space, and
- (iii) provided with a suitable alarm device for summoning assistance;

(b) every person granted access to the confined space must be provided with and trained in the use of the protection equipment referred to in subsection 160(2);

**(c) every employee entering into, exiting from and occupying the confined space must wear a safety harness that is securely attached to a life line that is attached to a secure anchor outside the confined space and is controlled by the qualified person referred to in paragraph (a)**

## 2. PROPOSAL

The Safety Notice Confined Space dated July 21, 2020 issued by the C-NLOPB was issued to prevent accidents and injuries surrounding confined space entry in the Canada-Newfoundland and Labrador Offshore Area. As indicated in the Use of Life lines section of the Safety Notice, it was indicated that for certain spaces, where the configuration makes the use of a life line impractical or unsafe, the Operator must seek regulatory approval from the C-NLOPB (in the form of a Regulatory Query) to not use life lines in those instances.

This RQ is to request deviation from the requirement of personnel having to use a life line in confined spaces if hazardous conditions exist and the proposal is to continue to follow the current Hebron/ExxonMobil Work Management System for work in confined spaces where a site specific rescue plan is developed for all confined space work.

The Permit to Work system is utilized as part of the work management system to control work activities in order to prevent incidents from uncontrolled work, communicate information clearly to avoid an inadequate understanding of work task hazards, gain necessary approvals and authorizations to execute work and to manage and control risks. The Job Safety Analysis (JSA) process is also used as a prerequisite for all work requiring a permit. The JSA must be reviewed and updated to reflect the specific conditions and immediate hazards and controls prior to work execution.

As part of the Permit to Work system, the Rescue Lead visits and assesses each confined space work site. Per the Safety Notice Confined Space, a life line is a preferred option but the Rescue Lead will make a determination based on the confined space site specific conditions, what rescue equipment (if any) is required to be installed at the work site and

DocuSign Envelope ID: 7C0154C2-2B32-451B-86B8-66EE45FBA119



whether a life line is practical and safe to use in that confined space work area or not. If the use of a retrieval life line system will pose excessive risk of entanglement, then other rescue equipment and procedures will be implemented.

## 3. JUSTIFICATION and RATIONALE

In addition to assessing a confined space for atmospheric content, the Work Management System requires the assessment of other hazards in a confined space such as obstructions and voids within the confined space that could pose a risk of injury. The use of a life line is not practical in all confined spaces due to the configuration of internal components of some vessels and the increased entanglement hazard with a life line. Many confined spaces on offshore production platforms do not have a uniform base and typically have nozzles, pumps, structural components and weirs prevalent and entanglement can become more of a hazard than not wearing a life line. If there is a potential for the retrieval life line to become an entanglement hazard that may create a greater hazard to the entrant(s) than any existing hazards, then the retrieval system should be ruled out as an option and an entry rescue capability needs to be employed.

For example:

- If the entrant(s) must move around corners, elevation changes, or other internal structures that would interfere with the ability to retrieve the entrant(s) from the space, then the retrieval life line system may not be adequate.
- If the life line creates further hazard in a confined space with entanglement that could lead to trip and fall hazards.
- If a worker requires rescue where time is of the essence, having to untangle a life line prior to extraction could impact the response time for a rescue.
- If there isn't a clear and uniform path to the exit resulting in the victim being pulled over obstructions, it may cause further personal injury to the worker due to towing them to the exit.
- If there isn't a clear path to the exit, retrieving a victim with a life line can pose issues with PPE, such as the breathing apparatus that could become displaced or damaged posing additional risk to the worker.
- If the life line becomes non-functional when attempting to rescue a victim, an entry rescue would then ultimately be required. This change in tactics could delay the rescue of the victim from the confined space.

**Summary & Conclusion:**

Exxonmobil proposes to continue to use the Work Management System, specifically a tailored Rescue Plan by a trained and competent professional for each confined space entry. This process enables the assessment of all confined space work to assess all risks and establish the work plan with the least risk for each individual confined space. Having the ability to follow established confined space procedures to determine if a life line should be used for each individual confined space will help reduce the risks associated with confined space entry work.

## 4. INTERNAL COMMITMENTS

Continue to follow the Work Management System currently utilized.

## 5. PRECEDENTS

Husky Energy RQ-20-00000682

## 6. OTHER RELEVANT INFORMATION

Hebron Work Management System Manual 2.0 Production Best Practices
Hebron Work Management System Appendix A
OIMS Work Management System and Addendum 6-4 Work Management

## 7. ATTACHMENTS

Hebron Work Management System Manual 2.0 Production Best Practices
Hebron Work Management System Appendix A

| ExxonMobil Canada Properties | HEBRON PROJECT | Hebron RQF# | RQF-HEB-099 |
|---|---|---|---|
| REGULATORY QUERY FORM | | DATE | December 2, 2020 |
| TITLE: Confined Space Entry Life Line Use | | | |

## RQF Originator

| | Signature | Date |
|---|---|---|
| [redacted] Regulatory Advisor | DocuSigned by: [redacted] FC15DF6BCAC046C... | December 2, 2020 |

## Hebron Endorsements

| Hebron Team Position | Signatures | Dates |
|---|---|---|
| RQ Originator Supervisor – [redacted] | DocuSigned by: [redacted] 8847BABB292F46E... | December 3, 2020 |
| Hebron Work Management SME- [redacted] | DocuSigned by: [redacted] 17F2D300D1984F9... | December 3, 2020 |
| Hebron SSHE Supervisor – [redacted] | DocuSigned by: [redacted] | December 8, 2020 |
| Hebron OIM – [redacted] | DocuSigned by: [redacted] 0CA07059 51EE401... | December 3, 2020 |
| Wells Operations Superintendent– [redacted] | DocuSigned by: [redacted] E6ABF8A83C97402... | December 3, 2020 |
| Hebron Asset Manager – [redacted] | DocuSigned by: [redacted] 7634EF1976814E7... | December 8, 2020 |

DocuSign Envelope ID: 7C0154C2-2B32-451B-86B8-66EE45FBA119

| ExxonMobil Canada Properties | HEBRON PROJECT | Hebron RQF# | RQF-HEB-099 |
|---|---|---|---|
| REGULATORY QUERY FORM | | DATE | December 2, 2020 |
| TITLE: Confined Space Entry Life Line Use | | | |

## Certifying Authority - LR Endorsement

| Position | Signature | Date |
|---|---|---|
| N/A | | |

## C-NLOPB Review and Decision

| Decision | | Title: C-NLOPB Chief Safety Officer |
|---|---|---|
| Approved | ☐ | Date: |
| Approved with Conditions | ☐ | |
| Rejected | ☐ | |
| Decision Details Attached? | Yes ☐ | Signature: |

DocuSign Envelope ID: B5679270-35C6-45A5-995D-2CBCF96EA28F

ExxonMobil Canada Properties

**Property of the Hebron Project**

This document may not be released in whole or in part without the express written permission of ExxonMobil Canada Properties as Operator of Hebron.

## OIMS Management System
## System 6-4 Work Management

# HEBRON PROJECT

# Work Management System - Manual

## Document Control Number: CAHE-EC-OOREF-01-006-4001-000

| Rev. | Date | Reason for Issue | EMCE System Admin | Hebron 6-4 System Administrator | System Owner |
|---|---|---|---|---|---|
| | | | | | |
| | | | | | |
| | | | | | |
| | | | | | |
| | | | | | |
| D0 | 28-Apr17 | Issued for Use | DocuSigned by: [redacted] | DocuSigned by: [redacted] | DocuSigned by: [redacted] |
| | | | Originated | Endorsed | Approved |

**Comment:**

**Total Page Count:**

**348**

DocuSign Envelope ID: DBC83A32-C98A-4963-9E1E-44593247DA33

ExxonMobil
*Production*

PRODUCTION
Best Practices

# Production Best Practices Work Management System

PRODUCTION
Best Practices

**Version 2.0 January 2017**

DocuSign Envelope ID: DBC83A32-C98A-4963-9E1E-44593247DA33



# Corporate Separateness Notice

This Manual is intended for the use of Exxon Mobil Corporation, its divisions, and its affiliates and, if specifically authorized by Exxon Mobil Corporation, other companies or projects in which Exxon Mobil Corporation or its affiliates own shares or otherwise have an interest.

Nothing in this material is intended to override the corporate separateness of local entities. Working relationships discussed in this material do not necessarily represent a reporting connection, but may reflect a functional guidance, stewardship, or service relationship. Where shareholder consideration of a local entity matter is contemplated by this material, responsibility for action remains with the local entity.

Exxon Mobil Corporation has numerous affiliates, many with names that include ExxonMobil, Exxon, Esso, and Mobil. For convenience and simplicity in this document, those terms and terms like corporation, company, "our," "we" and "it," are sometimes used as abbreviated references to specific affiliates or affiliate groups. Abbreviated references describing global or regional operational organizations and global or regional business lines are also sometimes used for convenience and simplicity. Similarly, ExxonMobil has business relationships with thousands of customers, suppliers, governments, and others. For convenience and simplicity, words like venture, joint venture, partnership, co-venture, and partner are used to indicate business relationships involving common activities and interests, and those words may not indicate precise legal relationships.

DocuSign Envelope ID: DBC83A32-C98A-4963-9E1E-44593247DA33



# Production Best Practice Summary

**Best Practice Overview**

The *EMPC Work Management System (WMS) Best Practice* describes the processes and practices that define the Company's Permit-to-Work management system, and is an EMPC cornerstone used to manage work safely at all operating sites. WMS ensures that work activities at Company-operated or Company-controlled sites are undertaken in an efficient, structured, and controlled manner that reduces incident risk to as low as reasonably possible. The system also provides a framework for identifying hazards, actively managing the risks associated with the work to be performed, and confirming that interfaces with the work activity are considered appropriately.

This Best Practice directly supports compliance achievement to the requirements of OIMS System 6-4, "Work Management."

**Expected Practices**

All content, including tools, within the following sections is considered *Expected Practices*, and directly supports compliance achievement to OIMS 6-4:

- Section 1.0, "Introduction"
- Section 2.0, "Work Management System"
- Section 3.0, "Permit to Work"
- Section 4.0, "Equipment Isolation and Reinstatement (Lock-out/Tag-out)"
- Section 5.0, "Gas Testing"
- Section 6.0, "Simultaneous Operations"

Notes:

- Scalability guidance is provided throughout the WMS Best Practice, and Production Units are encouraged to apply this scalability where applicable
- If deviations, exceptions, or changes are required, use the processes detailed in Section 1.3, "Deviations, Exceptions, and Changes".

**Broadly Applicable Practices**

There are no *Broadly Applicable Practices* contained within WMS.

**Supportive Practices**

There are no *Supportive Practices* contained within WMS.

**Key Performance Indicators**

Refer to Section 2.2, "Verification, Measurement, and KPIs".

**Suitcase Tool**

**Supporting Suitcase tool:** Electronic Permit To Work System (ePTWS)

*Continued*

DocuSign Envelope ID: DBC83A32-C98A-4963-9E1E-44593247DA33



## Production Best Practice Summary, Continued

| | |
|---|---|
| **Collaboration Forum** | **Supporting collaboration forum:** Work Management Network |
| **Best Practice Review Frequency** | WMS is to be reviewed by the Owner and Administrator at least every five years. |
| **Document Categorization** | This *Work Management System Best Practice* has the following categorizations:<br>▪ Management and Protection of Information (MPI) Classification: Unclassified<br>▪ Joint Venture Categorization: Novel<br>Refer to *EMPC PBP Principles* document, Section 2.2, for categorization impacts. |
| **Document Control and Distribution** | The Primary Record Holder (per ExxonMobil [EM] *Records Management Guidelines*) for this document is the Best Practice Administrator. An electronic copy is available from the EMPC PBP website, WMS SharePoint site, or external references within ePTWS. |
| **Production Best Practice Content Description** | The content of this Best Practice is categorized into the following three components:<br>▪ **Expected Practices** describe standardized activities that are expected to be done at all Assets within Production Units (PUs).<br>▪ **Broadly Applicable Practices** describe core activities routinely executed in the business. PUs selectively apply this content to improve value capture.<br>▪ **Supported Practices** are globally supportive institutional knowledge and tools. Production Units have flexibility to adopt this content based on business value.<br>Content within this Best Practice aligns to common criteria as defined in the *PBP Principles* document, Section 2.2. These criteria apply to all Production Best Practices. |
| **Production Best Practice Implementation Considerations** | PUs should consider the following when developing implementation plans, or changing how this PBP is locally implemented:<br>▪ PUs should not expect to be assessed on *Broadly Applicable* or *Supportive* content, even when adopted by the PU, *unless* the PU has decided to adopt this content as a means of business control defined within locally-owned PU management systems or business controls catalogues (for example, CIMS catalogues, OIMS protocols).<br>▪ Implementation coordinators and PBP practitioners are encouraged to engage local Controllers and OIMS contacts during PBP change management exercises to support identification and resolution of any business controls issues associated with a proposed change. |

*Continued*

DocuSign Envelope ID: DBC83A32-C98A-4963-9E1E-44593247DA33



## Production Best Practice Summary, Continued

**Approvals and Endorsements:**

**Best practice roles** Refer to the EMPC *PBP Principles* document, Section 2.2, for responsibilities associated with the roles listed below.

**Authored:** [redacted] — Content Advisor — Senior Work Management Advisor, Upstream Production Operations — March 1, 2017 — Date

**Endorsed:** [redacted] — Reliability & Work Management Supervisor, Upstream Production Operations — 3/6/17 — Date

**Endorsed:** [redacted] — PBP, OIC Manager, Upstream Production Operations — 3/14/17 — Date

**Approved:** [redacted] — Best Practice Administrator — Reliability & Work Management Supervisor, Upstream Production Operations — 03/06/17 — Date

DocuSign Envelope ID: DBC83A32-C98A-4963-9E1E-44593247DA33



# Document Change Log

**Management of Change**

Changes made to the *Work Management System Best Practice* are subject to the standard change management protocols as described in the EMPC *PBP Principles* document. For the purpose of executing change to this document, roles are assigned as follows:

- **Best Practice Change Coordinator:** WMS Team Lead, EMPC
- **Best Practice Administrator:** OS/PBP Manager, EMPC

All management of change records are retained by the document Administrator or delegate.

**Document update log**

The latest changes to this document are summarized in the table below.

| Version | Date | Description of Key Changes |
|---|---|---|
| 1.0 | April 2010 | Version 1 original issue |
| 1.1 | April 2013 | Post implementation lesson capture, input from Production Units and Network Workshop Version 1 Rev 1.0 |
| 1.1 | June 2013 | Best Practice Summary issued as part of 2013 PBP revitalization |
| 2.0 | January 2017 | Periodic Review Cycle - Input from Production Units and Network Workshop<br>▪ Section 1: Change to the Deviation, Exception, and PBP Change process, review cycle changed from 3 to 5 years, and add to roles.<br>▪ Section 2: Change to JSA process, Permit Matrix, Assessments, DWCM Agenda, and incorporated LSA's.<br>▪ Section 3: Change to the CSE definition, paper Permits, SWP Checklist, and incorporated "High Risk Electrical Guidance" document.<br>▪ Section 4: Change to Breaking Containment, isolation methods, paper certificates, change to TD approval process, and incorporated "Hydrocarbon and Air Freeing" and "Leak and Pressure Testing" guidance documents.<br>▪ Section 5: Clarification to Atmospheric Testing definition, requirements, and AGT qualifications.<br>▪ Section 6: Clarification to "Concurrent and Simultaneous Operations", Matrix item S3 "Wireline Operations & Crane), and removal of incorrect "High Risk CTU Operations" term.<br>▪ Minor grammatical, graphical, and or table edits throughout. |

DocuSign Envelope ID: DBC83A32-C98A-4963-9E1E-44593247DA33



# Table of Contents

**1.0 Introduction ..... 1-1**

1.1 Using This Document ..... 1-2
1.2 Regulatory Requirements ..... 1-9
1.3 Deviations, Exceptions, and Changes ..... 1-10
1.4 Roles and Responsibilities ..... 1-12
1.4.1 Positions Referenced in the System ..... 1-13
1.4.2 Combined Roles ..... 1-18
1.5 Definitions ..... 1-19
1.6 Tools ..... 1-26
1.6.1 Deviation Request Form ..... 1-26
1.6.2 Change Request Form ..... 1-26

**2.0 Work Management Framework ..... 2-1**

2.1 Work Management Process Flow ..... 2-3
2.1.1 Life Saving Actions ..... 2-4
2.1.2 Life Saving Actions Application ..... 2-5
2.1.3 Work Planning ..... 2-8
2.1.4 Pre-Job Planning ..... 2-10
2.1.5 Work Team Preparation ..... 2-18
2.1.6 Work Planning Review and Endorsement ..... 2-22
2.1.7 Work Site Preparation ..... 2-24
2.1.8 Work Authorization ..... 2-25
2.1.9 Work Execution ..... 2-26
2.1.10 Work Closeout ..... 2-27
2.2 Verification, Measurement, and KPIs ..... 2-28
2.3 Tools ..... 2-30
2.3.1 Job Safety Analysis Form ..... 2-30
2.3.2 Permit Pack Requirements Matrix ..... 2-30
2.3.3 Daily Work Coordination Meeting Agenda ..... 2-30
2.3.4 Assessment Form – PTW In-Field ..... 2-30
2.3.5 Assessment Form – PTW Desktop ..... 2-30
2.3.6 Assessment Form – JSA In-Field ..... 2-30
2.3.7 Assessment Form – JSA Desktop ..... 2-30
2.3.8 Assessment Form – ICC In-Field ..... 2-30
2.3.9 Assessment Form – ICC Desktop ..... 2-30
2.3.10 Assessment Form – TD In-Field ..... 2-30
2.3.11 Assessment Form – TD Desktop ..... 2-30
2.3.12 Assessment Tracking Register ..... 2-30
2.3.13 Life Saving Action Pages ..... 2-30

**3.0 Permit to Work ..... 3-1**

DocuSign Envelope ID: DBC83A32-C98A-4963-9E1E-44593247DA33



3.1 Permit to Work Overview ..... 3-3
3.1.1 PTWS Principles ..... 3-4
3.1.2 PTWS Requirements ..... 3-6
3.1.3 Criteria for Requiring a Permit ..... 3-10
3.1.4 Guidance for Work without a Permit ..... 3-11
3.1.5 Interface Management ..... 3-12
3.2 Completing the Work Permit ..... 3-14
3.3 Hot Work ..... 3-22
3.3.1 Hot Work Permit Considerations ..... 3-25
3.3.2 Hot Work Risk Management ..... 3-27
3.3.3 Control of Hot Work Health Hazards ..... 3-28
3.3.4 Hot Work Precautions ..... 3-30
3.4 Confined Space Entry ..... 3-34
3.4.1 Assessing Confined Space Entry Hazards ..... 3-36
3.4.2 Confined Space Entry Risk Management ..... 3-38
3.4.3 Confined Space Entry Precautions ..... 3-40
3.5 Critical Work Permit ..... 3-48
3.6 General Work Permit ..... 3-54
3.7 Tools ..... 3-56
3.7.1 Atmospheric Test Record ..... 3-56
3.7.2 Atmospheric Test Record (Supplement) ..... 3-56
3.7.3 Confined Space Entry Log-In/Log-Out Sheet ..... 3-56
3.7.4 Work Team Declaration (Supplement) ..... 3-56
3.7.5 Hot Work Permit ..... 3-56
3.7.6 Confined Space Entry Permit ..... 3-56
3.7.7 Critical Work Permit ..... 3-56
3.7.8 General Work Permit ..... 3-56
3.8 SWP Checklists ..... 3-56
3.8.1 Breaking Containment SWP Checklist ..... 3-56
3.8.2 Critical Lift SWP Checklist ..... 3-56
3.8.3 Working at Height SWP Checklist ..... 3-56
3.8.4 Diving Operations SWP Checklist ..... 3-56
3.8.5 Excavation and Ground Disturbance SWP Checklist ..... 3-56
3.8.6 High Risk Electrical Work SWP Checklist ..... 3-56
3.8.7 Abrasive Blasting SWP Checklist ..... 3-56
3.8.8 Hot Work SWP Checklist ..... 3-56
3.8.9 Confined Space Entry SWP Checklist ..... 3-56

**4.0 Equipment Isolation and Reinstatement ..... 4-1**

4.1 Process Summary ..... 4-3
4.2 Safety ..... 4-5
4.2.1 Risk Management ..... 4-6
4.2.2 Safety Precautions ..... 4-8
4.3 Temporary Defeat of Critical Devices ..... 4-10
4.3.1 Temporary Defeat Certificate ..... 4-16
4.3.2 Temporary Defeat Process ..... 4-17

DocuSign Envelope ID: DBC83A32-C98A-4963-9E1E-44593247DA33



4.4 Energy Isolation Methods and Systems ..... 4-20
4.4.1 Isolation Methods ..... 4-21
4.4.2 Isolation Integrity ..... 4-26
4.4.3 Valve Security ..... 4-33
4.5 Isolating Systems and Equipment ..... 4-35
4.5.1 Energy Isolation and Isolation Control Certificate ..... 4-36
4.5.2 Draining and Depressurizing ..... 4-51
4.5.3 Breaking Containment ..... 4-55
4.5.4 Blinding ..... 4-59
4.5.5 Hydrocarbon Freeing ..... 4-67
4.5.6 Cleaning ..... 4-80
4.6 Reinstating Facility Systems and Equipment ..... 4-84
4.6.1 Recommissioning ..... 4-86
4.6.2 Equipment Testing ..... 4-89
4.6.3 Leak and Pressure Testing ..... 4-91
4.6.4 Air Freeing ..... 4-101
4.6.5 Removing Energy Isolations ..... 4-110
4.6.6 Acceptance Testing ..... 4-113
4.7 Tools ..... 4-114
4.7.1 Temporary Defeat Certificate ..... 4-114
4.7.2 Isolation Control Certificate ..... 4-114
4.7.3 Functional Lock Removal Form ..... 4-114
4.7.4 Double Block and Bleed (DBB) Integrity Test ..... 4-114
4.7.5 Double Block Valve (DBV) Integrity Test ..... 4-114
4.7.6 Single Block Valve (SBV) Integrity Test ..... 4-114

**5.0 Gas Testing ..... 5-1**

5.1 Gas Types, Detectors, Testing, and Properties ..... 5-2
5.2 General Gas Testing Practices ..... 5-6
5.3 Using Electronic Gas Testers ..... 5-10
5.4 Using Tube Detectors ..... 5-12

**6.0 Simultaneous Operations ..... 6-1**

6.1 SIMOPS Process ..... 6-4
6.1.1 SIMOPS Activities ..... 6-5
6.1.2 SIMOPS Definitions ..... 6-6
6.1.3 SIMOPS Matrix ..... 6-13
6.1.4 SIMOPS Restrictions Tables ..... 6-19
6.2 Routine SIMOPS Job Planning ..... 6-38
6.3 Nonroutine SIMOPS Job Planning ..... 6-39
6.3.1 Job Execution ..... 6-42
6.4 Tools ..... 6-43
6.4.1 SIMOPS Decision Matrix ..... 6-43
6.4.2 SIMOPS Deviation Request and Approval Form ..... 6-43

**Figure 1-1** Work Management System Applies to Field and Plant Operations ..... **1-3**

DocuSign Envelope ID: DBC83A32-C98A-4963-9E1E-44593247DA33



# TABLE OF CONTENTS

**Figure 1-2** Work Management System – Scalability Matrix ..... **1-5**
**Figure 2-1** Work Management Framework and Process Flow ..... **2-3**
**Figure 2-2** Life Saving Actions ..... **2-4**
**Figure 2-3** JSA Task Hazard Assessment Form ..... **2-10**
**Figure 2-4** JSA Review & Hazard Management Form ..... **2-13**
**Figure 2-5** Work Management System Permit Pack Requirements Matrix ..... **2-21**
**Figure 3-1** Permit Process Flow ..... **3-15**
**Figure 4-1** Temporary Defeat Process Flow ..... **4-17**
**Figure 4-2** Double Block and Bleed Isolation ..... **4-23**
**Figure 4-3** Double Block Valve Isolation ..... **4-24**
**Figure 4-4** Single Block Valve Isolation ..... **4-25**
**Figure 4-5** Isolation Locks ..... **4-29**
**Figure 4-6** Function Locks ..... **4-30**
**Figure 4-7** Isolation Process Flow ..... **4-37**
**Figure 4-8** Blinds ICC ..... **4-62**
**Figure 4-9** Hydrocarbon Freeing Decision Process ..... **4-71**
**Figure 4-10** Leak and Pressure Testing Decision Process ..... **4-95**
**Figure 4-11** Equipment Re-instatement Air Freeing Decision Tree ..... **4-103**
**Figure 6-1** Example SIMOPS Matrix ..... **6-16**
**Figure 6-2** Classification of Simultaneous Activities on the SIMOPS Matrix ..... **6-17**
**Figure 6-3** Planning Process for Nonroutine SIMOPS ..... **6-39**

**Table 2-1** JSA Process Details ..... **2-14**
**Table 3-1** Work Permit Process Details ..... **3-16**
**Table 3-2** Potential Hydrocarbon Sources ..... **3-23**
**Table 3-3** Hot Work Barrier Requirements ..... **3-24**
**Table 3-4** Confined Space Entry Class Determination ..... **3-37**
**Table 3-5** Critical Work Permit Activities ..... **3-49**
**Table 4-1** Approval Level for Temporary Defeats ..... **4-14**
**Table 4-2** Approval Level for Temporary Defeats ..... **4-15**
**Table 4-3** Temporary Defeat Process ..... **4-18**
**Table 4-4** Valve Security Levels ..... **4-33**
**Table 4-5** Energy Isolation Process ..... **4-38**

DocuSign Envelope ID: DBC83A32-C98A-4963-9E1E-44593247DA33



**Table 4-6** Multiple Isolation Points Locking Process ..... **4-46**
**Table 4-7** General Flushing Process ..... **4-72**
**Table 4-8** Purge by Dilution Process ..... **4-75**
**Table 4-9** Purge by Displacement Process ..... **4-76**
**Table 4-10** Steaming Process ..... **4-77**
**Table 4-11** Hot Water Circulation Process ..... **4-79**
**Table 4-12** Testing Process ..... **4-96**
**Table 6-1** SIMOPS Activities ..... **6-5**
**Table 6-2** SIMOPS Definitions ..... **6-6**
**Table 6-3** SIMOPS Restrictions Tables ..... **6-20**
**Table 6-4** Deviation Request ..... **6-38**
**Table 6-5** SIMOPS Keyword Tool ..... **6-41**

DocuSign Envelope ID: DBC83A32-C98A-4963-9E1E-44593247DA33



# 1.0 Introduction

## Overview

**Introduction**

This document provides a detailed description of the Production Best Practice (PBP) *Work Management System* (WMS) for use by all Upstream Production Company field facilities. This System **must** be used to manage all work activities from the pre-job planning phase through the work execution and work site restoration phases.

This section provides a general overview of the Work Management System.

**Use of the term Company**

In this manual, the term "Company" refers to the ExxonMobil Production Company (EMPC).

**In this section**

This section contains the following information:

**1.1 Using This Document ..... 1-2**

**1.2 Regulatory Requirements ..... 1-9**

**1.3 Deviations, Exceptions, and Changes ..... 1-10**

**1.4 Roles and Responsibilities ..... 1-12**

1.4.1 Positions Referenced in the System ..... 1-13
1.4.2 Combined Roles ..... 1-18

**1.5 Definitions ..... 1-19**

**1.6 Tools ..... 1-26**

1.6.1 Deviation Request Form ..... 1-26
1.6.2 Change Request Form ..... 1-26

**Figure 1-1** Work Management System Applies to Field and Plant Operations ..... **1-3**

**Figure 1-2** Work Management System – Scalability Matrix ..... **1-5**

DocuSign Envelope ID: DBC83A32-C98A-4963-9E1E-44593247DA33



# 1.1 Using This Document

**Purpose**

This Work Management System (WMS) describes the key aspects and requirements of the Company's Processes and Practices regarding the Planning, Preparation, Execution and Reinstatement of work activities in EMPC's Operating Areas. The WMS is essential for managing work safely at operational sites. The WMS confirms that the activities at Company-operated or -controlled sites are undertaken in a structured and controlled manner to reduce the risk of incidents. The system also provides a framework for identifying hazards, actively managing the risks associated with the work to be performed, and confirming that interfaces with the work activity are considered appropriately.

This Work Management System addresses the requirements of Operations Integrity Management System (OIMS) System 6-4 Work Management.

**Scope and application**

**Applies**

The Work Management System applies to the control of work in all Production Company field and plant operations, including contracted activities. A key aspect of the WMS is the use of a Permit to Work (PTW) Process describe later in this manual.

The WMS controls the use of all four permits (Hot, Critical, General and Confined Space Entry Permits), referred to as "four (4) permit areas" and:

- Applies to work in all areas except those areas that are designated by the Production Unit (PU).
- Is designed primarily for use in areas containing hydrocarbon-bearing equipment and supporting or ancillary systems necessary to operate and control producing operations.

**Typical activities include:** Work on or in close proximity to vessels, tanks, piping, pig launchers and receivers, pipelines, wells, flowlines, pumps, compressors, generators, switchgear, control rooms, electrical systems, control systems, protective systems, safety equipment, fuel gas, and pneumatic and hydraulic systems.

The PU may designate specific areas, remote from hydrocarbon-bearing equipment, where only the Confined Space Entry and Critical Work Permits apply, referred to as two (2) permit areas, such as:

- Buildings
- Field offices
- Quarters
- Safe welding areas
- Procurement warehouses
- Radio towers
- Logistics (supply bases, heliports and transport)
- Open areas

*Continued*

DocuSign Envelope ID: DBC83A32-C98A-4963-9E1E-44593247DA33



## Using This Document, Continued

**Scope and application**, continued

Production Units **must** clearly identify areas for each of their facilities where four and two permit areas apply and any areas designated to be managed by another function. This information **must** be readily available to reference by all people involved in work activities at the facility.

The strategic approach to designating 4 and 2 permit areas **must** be endorsed by the Production Manager, while the specific designation of 4 and 2 permit areas on each facility **must** be approved by the Operations Manager.

Figure 1-1 Work Management System Applies to Field and Plant Operations

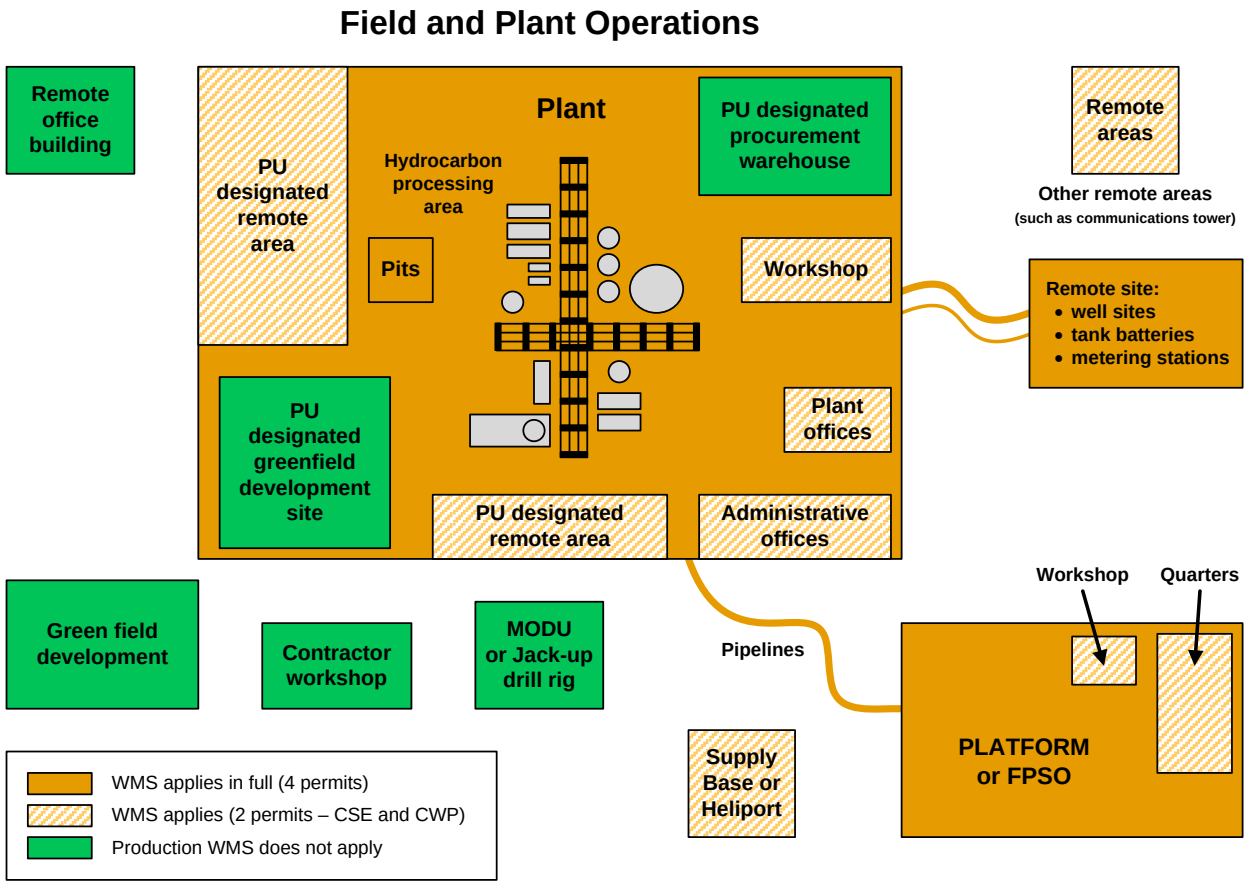


*Continued*

DocuSign Envelope ID: DBC83A32-C98A-4963-9E1E-44593247DA33



# Using This Document, Continued

**Scope and Application**, continued

**Does Not Apply**

The Production WMS *is not required for* activities and sites controlled by other functions (for example, Global Real Estate and Facilities [GREF] - managed office or a Development fabrication site) outside of Production field and plant operations and areas.

Note: Consideration can be given for utilization by other functions.

Within Production field and plant areas, provided that SIMOPS and interface are assessed, and the Production Manager approves, an area can be designated to be managed by another function using a separate WMS. SIMOPS guidelines and interfaces should be defined in conjunction with the other function in the bridging documents and approved by the PU prior to implementation. Examples where this might be appropriate are Procurement-managed warehouses within a plant site or designated Greenfield construction area, such as, additional process train within a plant complex.

On these Greenfield locations, third parties **must** have an equivalent System for controlling work activities. This EMPC Work Management System takes precedence where interfaces exist with operations.

The EMPC Work Management System **must** be applied to manage activities on equipment or systems when hydrocarbons are introduced and to manage any adjacent activities that can impact these areas (SIMOPS). Projects, system completions and operations teams need to define the process to manage the introduction of hydrocarbons; consideration should also be given to energizing electrical and other ancillary systems.

While this manual does not specifically address work management at Company-owned or -controlled fabrication or construction yards or new facility (Greenfield) construction sites, many of the work management controls in this system should be applied through:

- OIMS System 3-1 Project Execution
- OIMS System 8-1 Third-Party Services

*Continued*

DocuSign Envelope ID: DBC83A32-C98A-4963-9E1E-44593247DA33



## Using This Document, Continued

**WMS scalability**

The Work Management System is documented to take into account the different EMPC operations around the globe while maintaining the ability to manage work safely and practically.

In order to enable practical implementation of the WMS to large plants, offshore platforms, remote platforms, pipelines, remote field operations (such as, well pads or pump stations), workshops, and so forth, the controls documented are scalable.

The scalable application introduced by each PU for their Field and Plant Operations is consistent with the scalable components defined in the WMS and summarized in the following table. The decisions made by the PU are risk based and traceable (documented) through their Management of Change (MOC) system.

Figure 1-2 Work Management System – Scalability Matrix

| LOCATION / SCALABLE COMPONENTS | FIELD AND PLANT OPERATIONS | | | | Green Field site, remote Development Fabrication site, or GREF Managed Office |
|---|---|---|---|---|---|
| | Four (4) Permit Area | PU Designated Two (2) Permit Area | Remote Site | Non-permit Area or Activity | |
| Roles and Responibilities | Roles and Responibilities | | | Not Applicable | Not Applicable. Function to Manage |
| Permit Approvals | Documented | | Can be Documented, Verbal or eMail | | |
| Isolations verified by second person | YES (can be the PH if competent e.g. simple isolation 2 - 3 valves) | | YES, if available or treat as Personal Isolation | | |
| Personal Isolations | PU to determine activities allowed | | | YES | |
| JSA | YES (All Permits) | | | YES (jobs listed under the four permits + others specified by the PU) | |
| ePTWS (electronic Permit To Work System) | YES (Consider if required when EOFL* is < 5 yrs) | Consider implementation if permits can be centrally administered / issued | | Not Applicable | |
| Exceptions | As per PBP Principles (see Section 1.0 Tools) | | | PU to determine | |

*EOFL – End of Field Life

### Remote Field Operations (RFO)

There are unique circumstances when managing work on remote fields or facilities such as satellite platforms, field wellheads, tank batteries, pipelines, and valve stations cannot be executed with the same segregation of duties as those on fully staffed platforms or plants. In these circumstances, the intent of this WMS to conduct activities safely **must** be achieved, (for example, verification of isolations and demonstration of zero energy) and distinct steps are taken by the Permit Holder.

Further explanation for handling work in remote fields and facilities is provided in relevant sections of this System.

**Reference:** Section 3, RFO Scalability, page 3-5
**Reference:** Section 4, General Energy Isolation Process, page 4-40

*Continued*

DocuSign Envelope ID: DBC83A32-C98A-4963-9E1E-44593247DA33



## Using This Document, Continued

**Objectives**

The objectives of the Work Management System are to confirm that all activities necessary to produce, process, and export oil and gas are performed in accordance with Company and government regulations and industry systems, and to fulfill the OIMS System 6-4 objectives.

To achieve these objectives:

- All work activities are planned with due consideration to physical interfaces at the work site, potential simultaneous activities, hours of work required without a rest break, and the impact of shift and crew changes on the work activity.
- All work activities with potential higher risk are managed.
- Equipment and facilities are prepared for work activities to be performed, including safe and environmentally sound draining, venting, purging, and isolation.
- Controls are applied to the temporary disarming or deactivating of the following:
  - Critical alarms
  - Process control, shutdown equipment and systems
  - Other critical safety equipment (such as, fire pumps)
- A permit-to-work program is implemented that incorporates checks and authorizations that are consistent with the risks likely to be encountered.
- Work activities are performed in accordance with Company safety expectations and personnel safety management.
- Equipment and facilities are reinstated to a safe and environmentally sound working condition after the work activity is completed and appropriate personnel are informed of the revised equipment status.
- Lessons learned from planning and executing the work activities are captured for similar future work activities.
- Personnel at an operational facility are trained in the purpose and application of work management processes.

*Continued*

DocuSign Envelope ID: DBC83A32-C98A-4963-9E1E-44593247DA33



## Using This Document, Continued

**Users**

The users of this System are personnel who are responsible for managing, planning, supervising, or executing work on the Company facilities. This includes the following:

- Facility and Operations Managers
- Superintendents (Operations, Maintenance, Construction, and Workover)
- Site Persons in Charge (PICs), Production Supervisors, Field Foreman and Operations Supervisors
- Discipline (Maintenance, Construction, and Workover) Supervisors
- Safety, Health, and Environment (SHE) and OIMS Advisors
- Operators and work execution personnel

**Action highlights**

In this System, WARNING, CAUTION, IMPORTANT, and NOTE are presented throughout the text and used to highlight various actions as follows:

**WARNINGS** indicate situations in which bodily injury or death *could* occur through negligence or failure to follow the proper procedure.

**Example:**

! **WARNING:** Under normal operation, all operating machinery and electrical equipment **must** have functional safety guards, switches, and alarms in place. Follow the proper operating procedures.

**CAUTIONS** are used to inform users of undesirable consequences of actions or non-actions. Cautions are not as serious as warnings.

**Example:**

▲ **CAUTION:** Do not attempt to stop a closing elevator door with your hands or feet.

**IMPORTANT** information is more critical for the user than a note, but it does not pertain to actions that can result in serious consequences.

**Example:**

! **IMPORTANT:** Welding, burning, or hot work on painted surfaces or stainless steel or other alloys should be evaluated for appropriate exposure control methods.

**NOTES** express incidental information that is helpful in addition to the regular text information.

**Example:**

Note: Always plan an escape route in case of emergencies.

*Continued*

DocuSign Envelope ID: DBC83A32-C98A-4963-9E1E-44593247DA33



## Using This Document, Continued

**Local Production Unit Content**

Production Units (PUs) **must not** alter the content of a published Best Practice. When PU-specific information is needed (for example, to accommodate local regulatory requirements) an individual addendum should be written by the PU, and attached to Best Practice.

This manual provides **Appendix A** at the back of this Work Management System that may be used to capture the required activities assigned to Production Units in this system e.g. PU to identify jobs without a permit, PU to identify confined spaces, etc.

Alternatively, items can be stored in a different location preferred by the PU e.g. example, LAN, SharePoint or UDocs.

DocuSign Envelope ID: DBC83A32-C98A-4963-9E1E-44593247DA33



## 1.2 Regulatory Requirements

**Laws and regulations**

The Company will comply with all applicable laws and regulations when applying this System including application of permissible mechanisms wherein the Company is granted written approval to operate under specific design codes, specifications, or protocols. In addition to the regulatory requirements, the Company may also place additional requirements on operations that will meet or exceed regulatory requirements.

These and other applicable subordinate regulations, Company-specific approvals, plus obligations deriving from them are maintained in accordance with OIMS System 4-2 Compliance with Laws, Regulations, and Permits along with the PU's *Regulatory Compliance Manual*.

Each PU **must** review applicable regulatory requirements pertaining to Work Management, and reference or apply the regulatory requirements in addition to this System to meet or exceed regulatory compliance.

DocuSign Envelope ID: DBC83A32-C98A-4963-9E1E-44593247DA33



# 1.3 Deviations, Exceptions, and Changes

**Application of the system and deviations**

This System establishes actions that are required by the Company and actions that are recommended by the Company as follows:

- Use of the imperative terms ***must*** or ***must not*** indicate action that is required by the Company.
- Use of the indicative terms ***should*** or ***should not*** indicate action that is recommended by the Company.

Variance from the required actions in this System by a Production Unit should be carefully considered. "Deviations" from the requirements in this System **must** be handled as follows:

- Deviations from the ***must*** *or* ***must not*** requirements **must** be approved by the **Production Manager**.
- No deviations are allowed for ***Prohibited*** activities in the SIMOPS Matrix (**Reference:** Section 6).
- Deviations to should or should not recommendations are at the discretion of the Production Unit

Approval for deviations is only granted if other safeguards will be introduced that maintain the safety of personnel, the environment, and facilities.

Deviations only apply for the duration of the work scope for a single work activity

Deviations are processed using the PU Deviation Request form (Reference: Section 1, "Tools") which includes Risk Assessment and clearly documents the proposed deviation and approvals.

An example of a deviation is the requirement of using an Authorized Gas Tester for initial gas testing prior to work commencing. If an authorized gas tester is not used, then a deviation is required.

Note: This deviation would only apply to the specific job scope and duration.

**Emergency deviations from the system**

Emergency deviations are permitted, but the safety of personnel and protection of the environment and property **must not** be jeopardized. Once the emergency is controlled, the requirements contained in this manual will prevail. Any change implemented during the emergency **must** be re-assessed and approved as a deviation.

**Exception to the Best Practice**

Exceptions to the System are defined as a continuing or permanent deviation from the **must** rules.

Work Management Production Best Practice content and tools not implemented (for example, decision taken not to implement the electronic Permit to Work System) is also considered an exception.

All Exceptions **must** follow the PBP Principles Process.

*Continued*

DocuSign Envelope ID: DBC83A32-C98A-4963-9E1E-44593247DA33



## Deviations, Exceptions, and Changes, Continued

**Change Requests to Manual**

The Work Management System will be reviewed every five years by the Best Practice Owner for edits, enhancements, and continuous improvement opportunities.

Global changes to the Manual may be requested by a Production Unit at any time by using the PBP Work Management Change Request Form.

> **Reference:** Section 1, "Tools," PBP Work Management System Manual Change Request Form

The request **must** be approved locally by the OIMS 6-4 Owner and submitted to the Work Management System Network Owner for review and approval. The Network Lead and Facilitator review the Change Request and accept or reject Decisions on accepting or rejecting change requests will be communicated back to the requesting Production Unit. Accepted change requests will be made in the System following the PBP Principles Process.

DocuSign Envelope ID: DBC83A32-C98A-4963-9E1E-44593247DA33



# 1.4 Roles and Responsibilities

**Introduction**

This section contains the following information:

- Positions referenced in the system
- Combined roles

DocuSign Envelope ID: DBC83A32-C98A-4963-9E1E-44593247DA33



## 1.4.1 Positions Referenced in the System

**Introduction**

The following outlines the core functional roles and primary responsibilities associated with the WMS.

**Person in Charge (PIC)**

The facility or site senior Person in Charge. This is typically the Offshore Installation Manager (OIM), Facility Supervisor, Vessel Master, or designated Person In Charge by management. The PIC has primary responsibility for:

- Work management status and effectiveness.
- Endorsement of work planning activities, including simultaneous operations (SIMOPS).
- Conducting Daily Work Coordination meetings and *Endorse* permits.
- Ensuring that trained and competent personnel are assigned to plan, approve, and execute work at their facilities.
- Oversight and compliance to the WMS.
- Assigning personnel to conduct WMS assessments and conducting periodic assessments.

**Permit Holder (PH)**

Discipline Supervisors, Foreman, Front Line work crew Supervisor, or single individual performing work under a permit. The PH has primary responsibility for:

- Preparing or reviewing the Permit Pack documents including the work scope and location.
- Identifying hazards and controls for the work.
- Interfacing with the Area Authority.
- Participating in and completing the Job Safety Analysis.
- Reviewing Permit Pack documentation with other work group members (where applicable) at the Pre-Job Safety Toolbox meeting.
- Acting as second verifier for isolations (if competent).
- Confirming identified work site controls are in place and safe execution of work.
- Verifying and securing (lock and tag) the energy Isolation Control Point (if applicable).
- Witnessing the demonstration of zero energy by the Isolating Authority before accepting the permit.
- Completing work and restoring the work site to a clean and hazard-free condition.

*Continued*

DocuSign Envelope ID: DBC83A32-C98A-4963-9E1E-44593247DA33



## Positions Referenced in the System, Continued

**Area Authority (AA)**

The person designated by the PU (such as, Production Supervisor, Area Operator, or Functional Supervisor/Lead) who is responsible for:

- Safe work coordination within the designated area of authority.
- Assignment of specific roles and responsibilities associated with approved work activities
- Reviewing Permit Packs for quality and completeness (for example, job scope details, required SWP Checklists, Job Safety Analysis [JSA] content, Integrity Critical Procedures (or Integrity Critical Procedure Checklist), Temporary Defeats).
- *Authorizing* permits (only the Operations AA or PU designated person can perform this role)
- Conducting periodic assessments, reviewing assessments, and validate lessons learned.

**Area Authority Functional (AAF)**

The person designated by the PU (such as, Production Supervisor, Area Operator, or Functional Supervisor/Lead) who is responsible for:

- Safe work coordination within their designated area of authority.
- Reviewing Permit Packs for quality and completeness (for example, job scope details, required SWP Checklists, Job Safety Analysis [JSA] content, Integrity Critical Procedures (or Integrity Critical Procedure Checklist), Temporary Defeats).
- Verify ICC plans for their functional area of expertise as needed (High risk electrical, high voltage, specialized machinery, etc.)
- Conducting periodic assessments, reviewing assessments, and validate lessons learned.

**Area Operator (AO)**

The person designated by the PU (such as Unit, System, and Equipment Operators or Central Control Room Operators) who is responsible for:

- The operating equipment and systems in their area.
- The review, approval, and issue of the work permit to the PH.
- Conducting or assigning isolation and temporary defeat requirements.
- Acting as second verifier for isolations (if required).
- Reviewing and communicating work site controls and safe working processes to the PH.
- Verifying work status and restoring the equipment or system.
- Identifying how Zero Energy will be demonstrated to the Permit Holder.
- Demonstrating Zero Energy.

*Continued*

DocuSign Envelope ID: DBC83A32-C98A-4963-9E1E-44593247DA33



## Positions Referenced in the System, Continued

**Isolating Authority (IA)**

Personnel who have the skills, knowledge, and competency to perform energy isolation on equipment and systems necessary for the safe execution of work. Typically IAs are Area Operators, discipline trade personnel (electrical, mechanical, instrument, etc), or persons deemed competent by site management. The IA has primary responsibility for:

- Identifying isolation requirements in association with the work scope and the PH.
- Applying all isolations in accordance with the WMS and safe work practices.
- Conducting and verifying isolations to ensure Zero Energy state is achieved and maintained.
- When requested, assist AO to demonstrate Zero Energy state to the PH.
- Removing isolations and restoring equipment and systems to normal.

**Area Interface Authority (AIA)**

Personnel who are in charge, supervise, or lead activities that are identified by the PIC as having the potential to be impacted by the proposed work outlined on the permit to work. Typically these are identified as SIMOPS activities or other concurrent activities that could have a direct impact to the requested or planned work.

The AIA is required (where applicable) to:

- Evaluate the proposed permit activities, location, and hazard controls, in relation to their existing work to verify awareness and provide endorsement for the work to proceed.
- Electronically countersign or sign the paper copy of the Permit to Work.

**Authorized Gas Tester (AGT)**

Personnel who have performed the required training and are deemed competent to perform atmospheric testing of work areas, equipment, and systems to enable the safe execution of work. They are primarily responsible for:

- Assessing the work location and identifying all atmospheric testing requirements for the safe execution of work.
- Verifying that acceptable conditions exit to perform the proposed activity by performing atmospheric gas tests and documenting the information on the work permit as required.
- Ensuring testing equipment is fit-for-purpose, calibrated, and functional.
- Communicating abnormal atmospheric test information to the AA.

*Continued*

DocuSign Envelope ID: DBC83A32-C98A-4963-9E1E-44593247DA33



## Positions Referenced in the System, Continued

**Fire Watch**

A person deemed competent by site management to perform Fire Watch duties and is identified by the AA or AO to monitor the work area during hot work or when requested for potential spark throwing and spark generating activities. The Fire Watch is primarily responsible for:

- Ensuring the following:
  - Fire-fighting equipment is available and ready for immediate use.
  - Flammable materials are cleared away from the work site.
  - Drains are covered and sealed.
  - Sparks and welding spatter are contained.
- Initiating emergency alarms and response if a fire or gas release occur in the area.
- Monitoring the work area after work completion until a safe state is established.

**Confined Space Entry Attendant**

A person deemed competent by site management to act as the Confined Space Entry Attendant to ensure safe work control during all entries. The Attendant is primarily responsible for:

- Reviewing the Permit Pack entry requirements and confirming all identified controls are in place to allow safe entry.
- Identifying required entry and rescue equipment, and confirming equipment is in a ready state and available on site.
- Ensuring a rescue plan is developed and understood by involved personnel and rescue team.
- Confirming atmospheric testing is completed, documented, and monitored.
- Monitoring and documenting entry access and egress on the Confined Space Entry Permit.
- Monitoring entry area and evacuating personnel if an unsafe condition occurs.

The person who remains outside the confined space and monitors the activities inside and outside the confined space, knows the hazards and consequences of working inside, and is aware of the possible exposure effects; maintains an accurate count of authorized entrants, communicates with entrants, and summons rescue and emergency services as required.

**Confined Space Entry Supervisor**

The person who ensures the Confined Space Entrants and Confined Space Entry Attendant are trained to recognize the hazards of working in confined spaces, provides entrants with proper PPE, ensures a rescue team and alarm system is in place, and rescue team personnel are trained in first aid and cardiopulmonary resuscitation (CPR).

*Continued*

DocuSign Envelope ID: DBC83A32-C98A-4963-9E1E-44593247DA33



## Positions Referenced in the System, Continued

**Stand-by / Safety Watch**

The person assigned to monitor work activity who is familiar with the work being done, safety requirements of the job, and their role and responsibilities in regards to emergency response. Some of these roles and responsibilities can include:

- Maintaining a watch of ongoing work activities and safeguards to ensure controls are in place.
- Maintaining a watch of personnel during their execution of work to mitigate risk exposures that may occur.
- Initiate emergency response requirements and maintain communication to gain assistance where required.

**Permit Coordinator**

The person that helps support the application of the Work Management System and the day-to-day coordination of permitted work. The PTW Coordinator supports the Site Management team by assisting with planning, coordinating, and safe execution of work. The Coordinator should be competent in the Work Management Best Practice, familiar with work activities, and proficient in the ePTWS.

DocuSign Envelope ID: DBC83A32-C98A-4963-9E1E-44593247DA33



## 1.4.2 Combined Roles

**Combined roles**

Due to the organizational framework and scalable nature of operations within Company assets, roles and responsibilities can be combined to enable safe planning and execution using this System. When establishing combined roles and responsibilities, the following guidelines should be considered:

- Persons assigned are deemed competent to fulfill the roles and are capable of executing their responsibilities outlined in the WMS.
- Site Management identifies and assigns roles to individuals to ensure that adequate safeguards exist that allow personnel to perform multiple roles.
- Additional focus should be given to segregation of responsibilities for critical activities such as Hot Work, Confined Space Entry, and Critical Work.

  ▲ **CAUTION:** A person **must not** assume all three roles (PIC, AA, and AO) associated with a single work activity (insufficient segregation of responsibilities.)
  *The PIC approvals may be verbal or electronic under some circumstances, such as remote fields. Approval is given after discussion and confirmation that the job or change of scope can be done safely.*

  **Reference:** Section 3.1.1, "PTWS Principles," specifically "Remote Operations Scalability."

DocuSign Envelope ID: DBC83A32-C98A-4963-9E1E-44593247DA33



# 1.5 Definitions

| | |
|---|---|
| **Introduction** | The following definitions are referenced throughout this System. These definitions do not cover all terms, processes, and activities in the System. These definitions are intended to provide understanding of some key processes and terminology. Users of the Work Management System should seek understanding of any terminology, processes, and activities before executing work. |
| **Acceptance testing** | A planned testing process to confirm that the equipment is in ready-state and functioning correctly. |
| **Air freeing** | Removing oxygen from process equipment to prevent flammable mixtures occurring when hydrocarbons are reintroduced. |
| **Atmospheric testing** | Atmospheric testing or gas testing describes the activities and equipment used to test an environment's atmosphere or air to determine what contaminants are present and at what quantifiable levels, if used, are employed to ensure a *hazardous atmosphere* does not exist. |
| **Blinding** | The process of installing pressure-rated blinds or spades into process piping and equipment. |
| **Breaking containment** | Breaking the containment on equipment or systems such as hydrocarbons, chemicals, air, steam, fluids and gases. Examples of breaking containment activities are:<br>▪ Unbolting flanges and manways or removing screwed fittings on systems, such as, pipes, vessels, exchangers, valves, turbines, compressors, and pumps<br>▪ Opening enclosures such as pig launchers or receivers and filter housings<br>▪ Opening vents or drains to atmosphere<br>▪ Removing orifice plates<br>▪ Taking samples (when venting or draining to atmosphere) |
| **Cleaning** | Cleaning systems of residual products and substances so work can be conducted. |
| **Competent Person** | Person with knowledge and skills required to safely perform job-related tasks to achieve desired business outcomes. |

*Continued*

DocuSign Envelope ID: DBC83A32-C98A-4963-9E1E-44593247DA33



## Definitions, Continued

**Confined Space Authorized Entrant(s)**

Personnel entering and working inside the confined space who know the hazardous conditions they are working in, use the proper personal protective equipment (PPE), communicate with the Confined Space Entry Attendant, recognize any warning signs, and exit from the permit space when ordered to do so, or when a hazardous atmosphere or condition is detected.

**Critical lift**

A lift is classified as *critical* when one or more of the following applies [1, 2]:

*Additional information available in the Crane and Lifting Gear Reference Manual section 7.0*

- Personnel lifts
- Lifts considered *non-routine* [3] lifting operations.
- The lift reaches 80% of the crane's:
  - Current certified capacity using the static and dynamic load charts, or;
  - Design operating limits (for example, wind speed)
- Lifts over or near process or production equipment, accommodations, or other sensitive areas that could result in significant damage to the facility (including considerations for the shape and weight of the load, rigging configuration, potential to drop all or part of the load, or environmental conditions).
- Lifts are over temporary equipment on which dropped objects could have undesirable consequences (for example, wireline units, nitrogen purging equipment).
- Lifts that are over or in proximity to energized electrical power lines.
- Lifts through hatches, congested areas, piping, and between decks that have a potential to damage the lifting equipment or structure.
- The use of two or more cranes or lifting appliances to lift a single load.(4)
- Lift of hazardous materials (that is, radioactive materials, cryogenics, and explosives).
- Activities using a work basket, bosun's chair, or any specially designed suspension harness that is being operated by a crane.

Notes:

1. Where country or local regulatory requirements are more stringent, the Regulations must always prevail.
2. Criteria for critical lifts may not be limited to the listed activities. The lifting operation can be re-categorized as critical due to factors such as installation-defined environmental considerations, lift areas and corridors, shape of lifted object, type of lifting appliance, and equipment used.
3. *Non-routine* lifts include nonstandard containers or baskets, umbilical or coiled tubing unit (CTU) reels, personnel transfers using cranes not done on a regular basis, loads where it is difficult to estimate weight or center of gravity (or both), and lifts where the load is lowered into or lifted from the confined space.
4. The use of multiple cranes requires Operations Superintendent approval.

*Continued*

DocuSign Envelope ID: DBC83A32-C98A-4963-9E1E-44593247DA33



## Definitions, Continued

| | |
|---|---|
| **De-isolations** | Unlocking and moving isolation valves, reconnecting systems, removal of blinds, and unlocking electrical switches to their *normal operating state.* |
| **Designated welding area** | A designated welding area is an area that meets at least one of the following criteria:<br>▪ An area functionally and physically isolated (horizontally and vertically) from sources of potentially flammable or combustible materials.<br>▪ A designated area that has no flammable or combustible material.<br>Note: Designated welding areas may be pre-approved for hot work, allowing welding or similar activities to be performed under the guidelines for general work. |
| **Draining and depressurizing** | The process of draining fluids from vessels and pipework and removing pressure from isolated systems and equipment. |
| **Energy isolation (lock-out/ tag-out)** | Energy isolation (lock-out/tag-out) is a process used to facilitate and maintain equipment and systems at a zero energy state. This could involve positioning isolation valves, physical disconnection, blinding, securing electrical breakers and switches, and other approved isolation methods. |
| **Equipment testing** | The process of temporarily de-isolating equipment and energizing to a live-state for operational testing or fault finding. |
| **Gas-free areas: toxicity** | An area is considered to be gas free with respect to toxicity if the concentration of gas is less than the levels stipulated by regulatory agencies or by Company guidelines.<br>**Reference:** *Upstream Safety Manual*, "Hazardous Materials" |
| **Hazardous atmosphere** | An atmosphere that could expose workers to the risk of death, incapacitation, impairment of ability to self-rescue, injury, or acute illness. |
| **Higher-risk electrical work** | Higher-risk electric work involves activities with the potential (accidental or otherwise) for individuals to come in contact with energized electrical components of 300 volts or greater, or to be exposed to high temperatures or flashes resulting from electrical arcing or electrical fault conditions.<br>Work on live electrical systems above Extra Low Voltage (ELV) levels. Extra Low Voltage circuits have a voltage not exceeding 50 Volts RMS A.C. or 120 Volts D.C. between conductors or earth. E.g. 24VDC instrument loops, CCTV, data networks etc.<br>**Reference:** *Upstream Safety Manual*, "Electrical Safety" |

*Continued*

DocuSign Envelope ID: DBC83A32-C98A-4963-9E1E-44593247DA33



## Definitions, Continued

| | |
|---|---|
| **Hydrocarbon freeing** | Removing residual hydrocarbon liquids and gases from vessels, pipework, and equipment to prevent flammable mixtures when opened to atmosphere. |
| **Hydrocarbon source activity** | Hydrocarbon source activities are activities that can result in a hydrocarbon release. These include:<br>▪ Breaking containment<br>▪ Hydrocarbon bunkering (for example, transfer from supply boat to platform)<br>▪ Pressuring up process equipment that has been previously opened |
| **Immediately dangerous to life and health (IDLH)** | An atmosphere that poses an immediate threat to life, would cause irreversible adverse health effects and/or would impair an individual's ability to escape from a dangerous atmosphere. Includes oxygen deficient atmospheres, and atmospheres where the hazardous contaminant(s) cannot be measured or reasonably estimated. |
| **Inerting** | Inerting is the displacement of an atmosphere by a nonreactive gas (commonly nitrogen) to such an extent that the resulting atmosphere is no longer within the flammable limits.<br>! **WARNING:** Inerting creates an oxygen-deficient atmosphere that is immediately dangerous to life and health (IDLH). |
| **Isolation planning** | The process in which competent individuals identify energy isolation requirements, assess relevant hazards, document equipment and system isolation points on an Isolation Control Certificate (ICC), develop isolating plans (where required), and ensure energy isolation verification and demonstration is performed prior to work execution.<br>Note: The ICC is also referred to as Isolation Control Certificate (ICC) in the electronic Permit to Work System (ePTWS). |
| **Job closeout** | At the completion of a job, the process of closing out Isolation and Temporary Defeat Certificates, closing out work permits, and updating blind lists, status boards, and other documentation associated with the Permit Pack. |
| **Leak testing** | Introducing pressure to the system to confirm that integrity has been restored and there are no leaks. |

*Continued*

DocuSign Envelope ID: DBC83A32-C98A-4963-9E1E-44593247DA33



## Definitions, Continued

| | |
|---|---|
| **LEL** | Lower explosive limit (LEL) is the lowest concentration of a flammable gas or vapor in air that ignites when an ignition source is present. |
| **Permit Pack** | Compilation of associated documents that accompany a Permit to Work for the safe execution of work. Permit Pack content is determined by using the Permit Pack Requirement Matrix. Permit Packs may include procedures, checklists, safe work practices, piping and instrumentation diagrams (P&IDs), Isolation Control Certificates, Tepmporary Defeat Certificates, and any other document necessary to undertake the work. |
| **Permit system** | A written process for preparing and issuing permits for work to be performed (that is, general work, hot work, critical work, and confined space entry) and for returning the permit space to service following the termination of the work performed. |
| **Permit to work** | A work control document required for the planning, communication, authorization of work execution, and reinstatement as identified in the Work Management System.<br>**Reference:** Section 3, "Permit to Work" |
| **Personal isolation** | **Reference:** Section 4, "Energy Isolation and Isolation Control Certificate," "Personal Isolation (Delegated Isolation)" |
| **Positive isolation** | Physical disconnection and blinding. Blinds, spades, plates, clamped flanges, or other terms are used to describe the devices used to positively segregate the energy, substances, and materials from the proposed activity. These devices **must** be rated for the design pressure of the system. |
| **Purging** | Purging is an operation in which a gas or liquid is displaced from a vessel or piping by another gas or liquid.<br>**Reference:** *Upstream Safety Manual*, "Operating Equipment and Facilities," and "Piping Connections" |
| **Recommission-ing** | At the conclusion of work, the process of reinstating equipment components (for example, pipework, flanges, circuit breakers and control systems), removing blinds and spades, and confirming that the system integrity is restored. |

*Continued*

DocuSign Envelope ID: DBC83A32-C98A-4963-9E1E-44593247DA33



## Definitions, Continued

**Remote Field Operations (RFO)**

Remote Field Operations can be designated by the PU in instances where access to the work location and ePTWS are limited and resources are not readily available, such as:

- Normally unstaffed platforms
- Well locations outside of plant fence lines
- Tank Batteries
- Pipeline valve stations
- Metering Stations
- Standalone compressor stations outside of plant operating areas
- Remote work areas where considerable travel distance or time is required

**Removing Temporary Defeats**

The process of reinstating the functionality of critical devices or control systems on equipment that is in service.

**Risk (Management)**

During work planning, job execution, or any other time that it is not clear that the relevant hazards have been sufficiently controlled, additional assessment of the risk **must** be evaluated. If the hazards cannot be properly managed, the task **Must not** be performed.

- **Risk Assessment**: The process of judging the significance of risk and determining whether further risk reduction or mitigation is warranted.
- **Last Minute Risk Assessment (LMRA)**: A brief, general, personal hazard assessment made by each worker before and throughout every task. A LMRA may trigger a Risk Screening if identified hazards cannot be adequately mitigated before initiating or continuing work.
- **Job Safety Analysis (JSA):** A pre-job planning tool for identifying and mitigating hazards related to a scope of work. A JSA may trigger a Risk Screening if identified hazards cannot be adequately mitigated before initiating work.
- **Risk Screening**: A screening level assessment to determine if a hazard, issue, or concern should be addressed through a Structured Risk Assessment or through existing OIMS Processes. The risk screening is performed by an approved Risk Screener and approved by the Operations Superintendent. The EMPC PBP for Risk Assessment and Management (RAM Manual) provides the guidance and form for Risk Screening.
- **Risk Screener:** An individual qualified and approved by the PU OIMS 2-1 Owner to perform Risk Screenings.

*Continued*

DocuSign Envelope ID: DBC83A32-C98A-4963-9E1E-44593247DA33



## Definitions, Continued

**Risk (Management)**, continued

- **Structured Risk Assessment**: A chartered Risk Assessment with a qualified team to categorize the relative significance of a hazard using the Corporate SSH&E Risk Matrix and approve, manage, and steward the risk according to OIMS 2-1. Scenario Based Risk Assessment (SBRA) is usually the preferred methodology for structured Risk Assessment for EMPC. The EMPC PBP for Risk Assessment and Management (RAM Manual) provides the guidance and form for Scenario Based Risk Assessment.

**Task Hazard Assessment**

The process of identifying hazards and potential controls associated with work activities and their location. The Task Hazard Assessment is used as part of the Permit to Work System and is used in developing a Job Safety Analysis (JSA).

**Temporary Defeat (TD)**

A Temporary Defeat is the isolation or removal of a critical device or a critical system while the equipment or facility being protected can remain in service because adequate alternative controls that maintain safety and integrity can be provided.

**Reference:** Section 4.3, "Temporary Defeat of Critical Devices"

Note: The Temporary Defeat Certificate is referred to as a Supplementary Control Certificate (SCC) in the electronic Permit To Work System (ePTWS).

**Zero Energy**

Zero Energy state is achieved when sources are isolated, there is no potential for inadvertent or accidental de-isolation while work is being conducted, and there is no energy that would be hazardous to people while breaking containment or working on the equipment.

DocuSign Envelope ID: DBC83A32-C98A-4963-9E1E-44593247DA33

DocuSign Envelope ID: DBC83A32-C98A-4963-9E1E-44593247DA33



# 1.6 Tools

**Forms**

The following document is referenced in this section:

1.6.1 Deviation Request Form

1.6.2 Change Request Form

DocuSign Envelope ID: DBC83A32-C98A-4963-9E1E-44593247DA33

ExxonMobil Production

# PBP Work Management System
# Production Unit Deviation Request

## Note: Deviations are approved on a per job basis. If a permanent exception is desired, see the PBP Exception Process.

| | |
|---|---|
| **Production Unit:** | **Date:** |
| **Originator:** (name print) | **Originator:** (Sign) |
| | |
| | |
| **Section and Page Number Associated with Deviation:**<br>Specific Wording of section | |
| **Deviation Request:** | |
| **Reason for Deviation (explain rationale for Deviation):** | |
| **Precautions taken to maintain safety provided by original rule (attach documents as needed, such as Risk Assessment):** | |

| | Signature | Date |
|---|---|---|
| **PU Network Member or OIMS 6-4 Admin** | | |
| | | |
| **Operations Manager** | | |
| | | |
| **Production Manager** | | |
| | | |
| | | |
| | | |
| | | |

**Comment:**

DocuSign Envelope ID: DBC83A32-C98A-4963-9E1E-44593247DA33

ExxonMobil Production

# PBP Work Management System
# Manual and ePTWS Change Request Form

| | |
|---|---|
| **Production Unit:** | **Date:** |
| **Originator** (name print) | **Originator** (Sign) |

| | |
|---|---|
| **Section and Page Number to Edited/Amended** | |
| **Detail Change Request** | |
| **Reason for Change (explain rationale for change or improvement opportunity:** | |

| **PU Endorsement** | | |
|---|---|---|
| | **Signature** | **Date** |
| **PU Network Member or OIMS 6-4 Owner** | | |
| **Comment:** | | |
| **PU OIMS 6-4 Owner** | | |
| **Comment:** | | |

| **PBP Approval for Change Request** | | |
|---|---|---|
| | **Signature** | **Date** |
| **Network Facilitator** | | |
| **Comment:** ☐ **Accept** ☐ **Reject** | | |
| **Network Lead** | | |
| **Comment:** ☐ **Accept** ☐ **Reject** | | |

| | |
|---|---|
| **Does this change require immediate Change** | ☐ **Yes** |
| **Target Date for Change** ***(if approved)*** | |

DocuSign Envelope ID: DBC83A32-C98A-4963-9E1E-44593247DA33



# 2.0 Work Management Framework

## Overview

**Introduction**

This section provides a general overview of the Work Management System framework from the work planning process through the work execution phase to the work site or equipment restoration and reinstatement phases.

**In this section**

This Section contains the following information:


**2.1 Work Management Process Flow ..... 2-3**

2.1.1 Life Saving Actions ..... 2-4
2.1.2 Life Saving Actions Application ..... 2-5
2.1.3 Work Planning ..... 2-8
2.1.4 Pre-Job Planning ..... 2-10
2.1.5 Work Team Preparation ..... 2-18
2.1.6 Work Planning Review and Endorsement ..... 2-22
2.1.7 Work Site Preparation ..... 2-24
2.1.8 Work Authorization ..... 2-25
2.1.9 Work Execution ..... 2-26
2.1.10 Work Closeout ..... 2-27

**2.2 Verification, Measurement, and KPIs ..... 2-28**

**2.3 Tools ..... 2-30**

2.3.1 Job Safety Analysis Form ..... 2-30
2.3.2 Permit Pack Requirements Matrix ..... 2-30
2.3.3 Daily Work Coordination Meeting Agenda ..... 2-30
2.3.4 Assessment Form – PTW In-Field ..... 2-30
2.3.5 Assessment Form – PTW Desktop ..... 2-30
2.3.6 Assessment Form – JSA In-Field ..... 2-30
2.3.7 Assessment Form – JSA Desktop ..... 2-30
2.3.8 Assessment Form – ICC In-Field ..... 2-30
2.3.9 Assessment Form – ICC Desktop ..... 2-30
2.3.10 Assessment Form – TD In-Field ..... 2-30
2.3.11 Assessment Form – TD Desktop ..... 2-30
2.3.12 Assessment Tracking Register ..... 2-30
2.3.13 Life Saving Action Pages ..... 2-30

**Figure 2-1** Work Management Framework and Process Flow ..... **2-3**

**Figure 2-2** Life Saving Actions ..... **2-4**

**Figure 2-3** JSA Task Hazard Assessment Form ..... **2-10**

**Figure 2-4** JSA Review & Hazard Management Form ..... **2-13**

DocuSign Envelope ID: DBC83A32-C98A-4963-9E1E-44593247DA33



**Figure 2-5** Work Management System Permit Pack Requirements Matrix ..... **2-21**

**Table 2-1** JSA Process Details ..... **2-14**

DocuSign Envelope ID: DBC83A32-C98A-4963-9E1E-44593247DA33



## 2.1 Work Management Process Flow

**Introduction**

Use of the Work Management System Framework is key to strengthening barriers in areas associated with people, environment, processes, and equipment. The following work elements describe a series of work flow process steps that enable work on the facilities to be planned, coordinated, controlled, and executed in a safe and efficient manner. These elements form the basis of the Work Management System (WMS) and fall into the general categories listed in this section.

**WMS flowchart**

The following flowchart summarizes the Work Management framework and process flow:

Figure 2-1 Work Management Framework and Process Flow

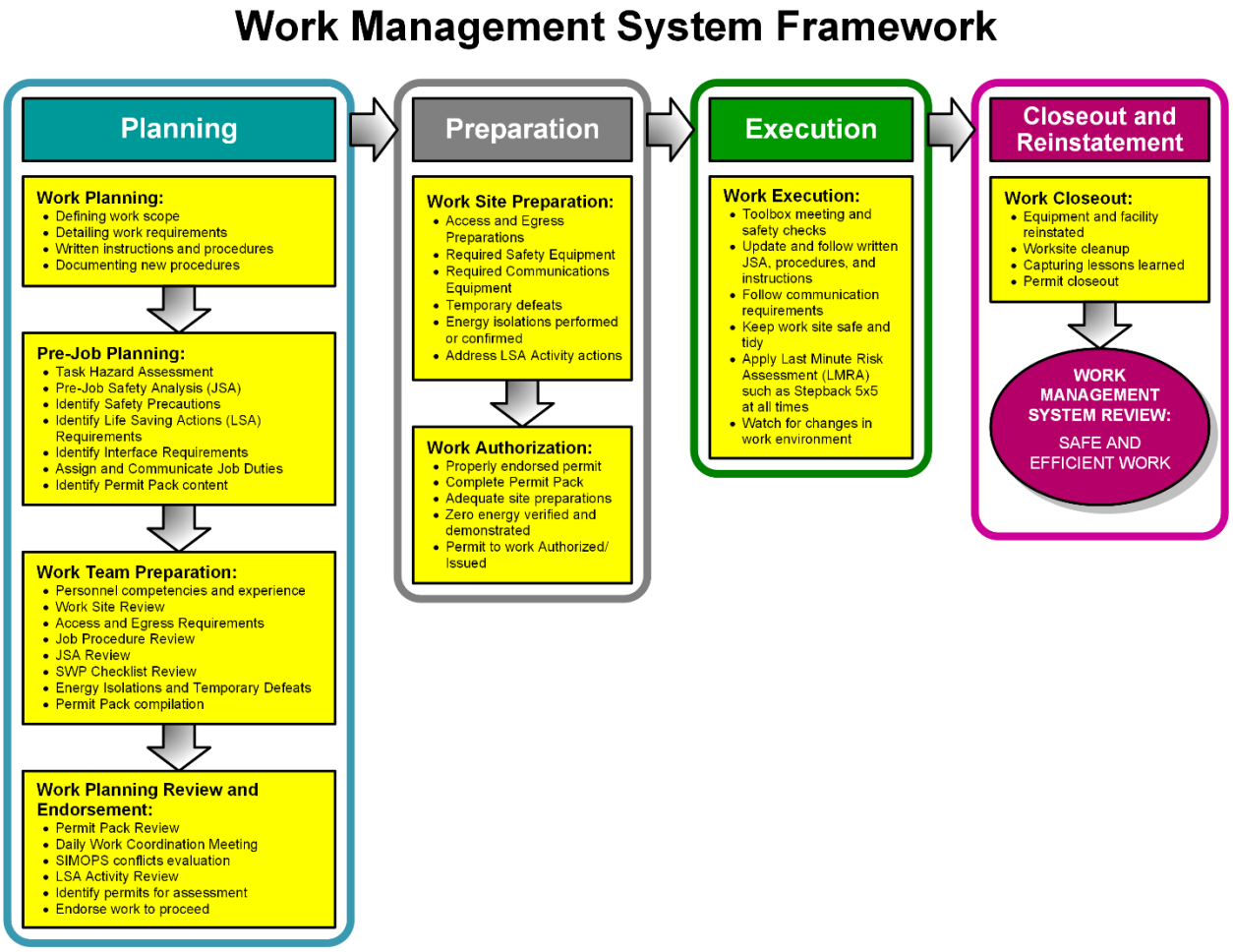

DocuSign Envelope ID: DBC83A32-C98A-4963-9E1E-44593247DA33



## 2.1.1 Life Saving Actions

**Overview**

Life Saving Actions are key actions to prevent serious injuries during higher-risk activities. They provide globally-consistent actions to safely manage higher-risk activities. They describe the most important aspects of our Work Management System.

The primary focus is on managing exposures in activities at our work sites. Actions have been developed for) common exposures across work sites.

- Work Authorization and Critical procedures are over-arching processes supporting the higher risk LSA Activities.
- The core LSA activities are the defined Higher-Risk Activities.

  Note: All have established actions to be completed prior to and during work execution.

Figure 2-2 Life Saving Actions

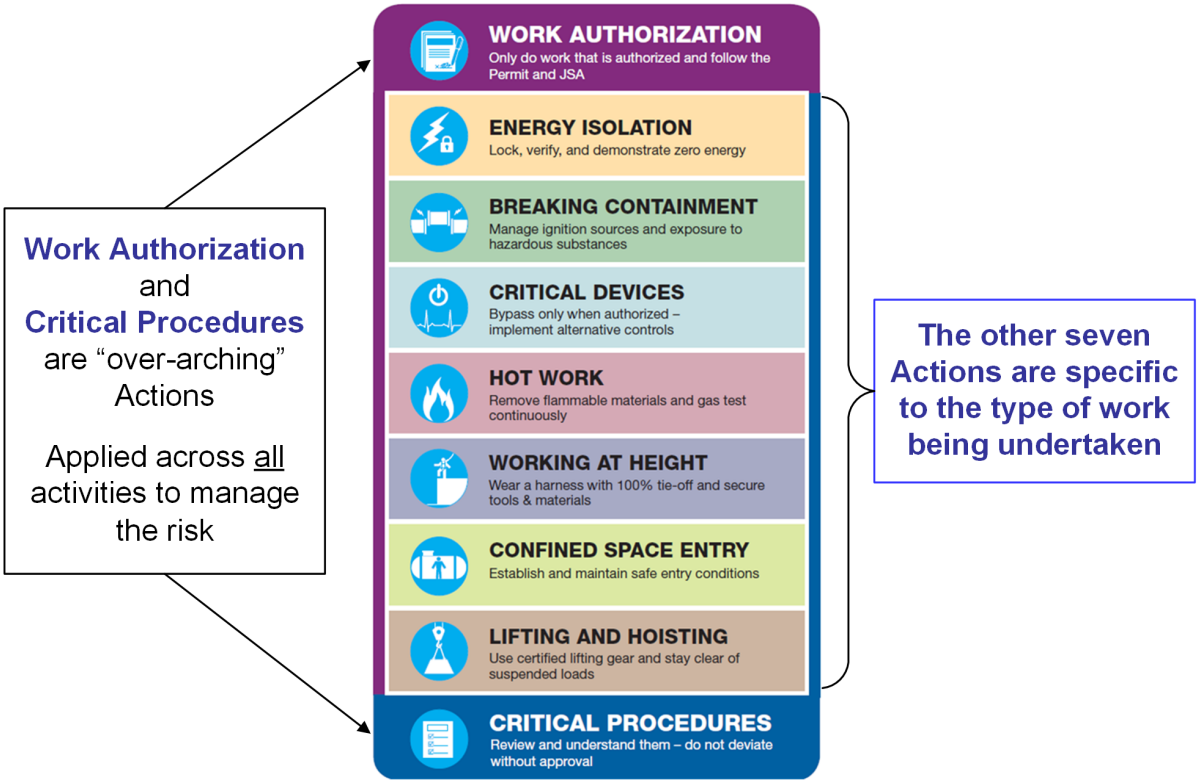

DocuSign Envelope ID: DBC83A32-C98A-4963-9E1E-44593247DA33



## 2.1.2 Life Saving Actions Application

**Applications**

All work activities involve Risk. For Life Saving Action activities the defined Actions **must** be completed prior to and during work execution and reinstatement.

For planned LSA activities additional focus is to be applied to ensure the actions and controls are in place and that the risk exposure is eliminated or reduced.

All LSA Work Activities require a permit and/or JSA in all instances regardless the complexity or level of risk.

During the Daily Work Coordination Meeting all Life Saving Action activities **must** be identified and consideration given to the following:

- Job Scope Verification
- On site Supervision
- Assess resource requirements and competency
- Worksite planning walkthroughs
- Job site controls verification

Actions have been developed for NINE exposures that are common across EMPC work sites. Where applicable:

- List the Actions as key controls in the JSA.
- Discuss the Actions at the jobsite before starting the job.
- Intervene if the Actions are not applied correctly.

**Work Authorization**

**Work Authorization:** Only do work that is authorized and follow the Permit and JSA:

- Clearly describe the work scope.
- Do the pre-job safety planning.
- Get the Permit authorized before work each shift.
- Review the Permit Pack with the team at the worksite.
- If the work scope changes, STOP. Update and re-authorize Permit before resuming.

**Energy Isolation**

**Energy Isolation**: Lock, verify, and demonstrate zero energy:

- Develop and verify an Isolation Plan for the job.
- Allow only competent personnel to perform isolations.
- Verify isolations and ensure equipment is in a Safe State – proceed only when zero energy has been demonstrated.
- Confirm that all jobs are complete prior to reinstatement.

*Continued*

DocuSign Envelope ID: DBC83A32-C98A-4963-9E1E-44593247DA33



## Life Saving Actions Application, Continued

| | |
|---|---|
| **Breaking Containment** | **Breaking Containment**: Manage ignition sources and exposure to hazardous substances:<br>▪ Confirm break-points prior to commencing work.<br>▪ Confirm Energy Isolation is complete.<br>▪ Manage ignition sources.<br>▪ Protect for exposure to toxic and hazardous substances – use correct PPE. |
| **Critical Devices** | **Critical Devices**: Bypass with authorized – implement alternative controls:<br>▪ Do not defeat or bypass a Critical Device without approval.<br>▪ Document all defeated or bypassed Critical Devices.<br>▪ Put alternative controls in place.<br>▪ Communicate defeats and controls to affected personnel.<br>▪ Reinstate Critical Devices Promptly. |
| **Hot Work** | **Hot Work**: Remove flammable materials and gas test continuously:<br>▪ Confirm Hot Work Barriers and controls.<br>▪ Remove all flammable or combustible materials.<br>▪ Gas testing prior to starting work and continuously monitor atmosphere.<br>▪ Competent Fire Watch is present with required equipment. |
| **Working at Heights** | **Working at Heights**: Wear a harness with 100% tie-off and secure tools and materials:<br>▪ Be competent in the use of fall protection.<br>▪ Inspect all fall protection, work platforms, scaffolds, ladders and tie-off points.<br>▪ 100% tie-off when Working at Heights.<br>▪ Secure all tools and work materials.<br>▪ Rescue Plan is in place and ready to execute. |
| **Confined Space Entry** | **Confined Space Entry**: Establish and maintain safe entry conditions:<br>▪ Determine the Entry Class and apply required controls.<br>▪ Develop an Atmosphere Monitory Plan – continuously monitor during entry.<br>▪ Assign competent CSE Attendant/Standby.<br>▪ CSE Rescue Plan is in place and ready to execute. |

*Continued*

DocuSign Envelope ID: DBC83A32-C98A-4963-9E1E-44593247DA33



## Life Saving Actions Application, Continued

| | |
|---|---|
| **Lifting and Hoisting** | **Lifting and Hoisting**: Use certified lifting gears and stay clear of suspended loads:<br>▪ Use certified lifting equipment – inspect before use.<br>▪ Document and approved Critical Lift Plans.<br>▪ Assign competent personnel for lifting, rigging and signaling.<br>▪ Control the lift area and pathway – stay clear of suspended loads. |
| **Critical Procedures** | **Critical Procedures**: Review and understand them – do not deviate without approval:<br>▪ Review the Critical Procedure before starting the job – verify understanding.<br>▪ Attach the Critical Procedure to the Permit Pack.<br>▪ Use the Critical Procedure at the worksite – do not deviate without approval.<br>▪ Use the MOC Process to change a Critical Procedure. |

DocuSign Envelope ID: DBC83A32-C98A-4963-9E1E-44593247DA33



## 2.1.3 Work Planning

**Introduction**

This section provides details on the key activities that fall under the Work Planning element of the Work Management process flow. The work planning activities are a series of steps intended to confirm that jobs on the Company facilities are planned appropriately. They are closely tied to the work permit request, Task Hazard Assessment and Controls, and Permit Pack requirement sections of the Work Permit. The level of detail for each activity depends on the complexity of the work activity or task and on the risks involved.

**Work scope**

It is important that the work scope is clearly and accurately documented so there is no ambiguity regarding the proposed work, the equipment, or location involved.

The work scope detail should include information regarding Preparation, Execution, and Closeout & Reinstatement aspects of the work activity.

Consider the following while defining the work scope:

- Precise tasks to be performed and clearly document on the permit.
- Order for performing the tasks.
- Tools, materials, and equipment required.
- Specific location and system or equipment to be worked (with consideration for hazardous area classification where appropriate).
- Identification and documentation of required energy isolations and temporary defeats.
- Division and communication of responsibilities for functional groups (such as, operations, maintenance, and construction) are well defined, documented, and understood.

**Work Requirements**

The task of detailing work requirements requires consideration of the following factors and documentation of the requirements to perform the work safely and efficiently (as applicable):

- Required resources and skills
- Time required to do the work
- Allowable weather conditions
- Potential conflicting activities
- Equipment and tool preparations
- Materials and consumables requirements
- Existence of relevant written procedures, instructions, Safe Work Practices and Checklists or Work Aids
- Safe access and egress for personnel and equipment
- Specific personal protective equipment (PPE)

*Continued*

DocuSign Envelope ID: DBC83A32-C98A-4963-9E1E-44593247DA33



## Work Planning, Continued

**Written instructions and practices**

Permitted work performed on facilities should be covered by documentation. These can come from several sources, depending on the:

- Complexity of the work
- Frequency with which the work is performed
- Risk inherent in the work
- Potential consequences of executing work improperly

The sources of these written practices or instructions can be:

- *Upstream Safety Manual*
- System industry practices
- Regulatory requirements
- Manufacturer procedures
- Facility operating procedures and checklists
- Facility maintenance procedures
- Safe Work Practices and associated Checklists
- Work aids
- Work orders
- Specific job procedures, precautions, and communication requirements

**New procedures**

A possible final step in the work planning process is the documentation of new procedures. The creation of new procedures or the revision of old procedures **must** follow the process for procedure development found in OIMS System 6-1 Operating and Maintenance Procedures and the Competency Assurance System (CAS).

DocuSign Envelope ID: DBC83A32-C98A-4963-9E1E-44593247DA33



## 2.1.4 Pre-Job Planning

**Introduction**

This section provides details on the key activities that fall under the Pre-Job Planning element of the Work Management process flow. They are closely tied to the Work Permit request and Task Hazard Assessment and controls portions of the Work Permit.

The pre-job planning activities confirm that the safety aspects of work on the company facilities are appropriately planned and will assist in identifying the required processes and documentation needed in the Permit Pack. The level of detail for each activity depends on the complexity of the work activity or task and the risks involved.

**Task Hazard Assessment (THA)**

The THA is the tool to be used by personnel involved in planning, preparation, and execution through to closing out the task. It is a prompt sheet that can be used multiple times to help individuals identify specific hazards during all phases of the job and specific controls that could be applied to manage these hazards. It is not an all-inclusive list of hazards and controls but should facilitate the thinking process.

Figure 2-3 JSA Task Hazard Assessment Form

**EMPC — JOB SAFETY ANALYSIS – TASK HAZARD ASSESSMENT FORM — January 2017**

**11** This table of Hazards and Controls can assist the work group to manage hazards for the proposed work. The table does not include all possible hazards. It is expected that the required PPE for the activity and work conditions are used. Determine the Hazards that are present for the task and identify the Controls to be implemented.

| Pressurized Equipment | Poor Lighting or Visibility | Personnel | Confined Space | Simultaneous Operations (SIMOPS) | Weather | Ignition Sources |
|---|---|---|---|---|---|---|
| ☐ Perform isolation - LO/TO, blinding, or defeat<br>☐ Depressurize, drain, purge, and vent<br>☐ Relieve trapped pressure<br>☐ Avoid auto-refrigeration when depressurizing<br>☐ Anticipate residual pressure or fluids<br>☐ Secure temporary hoses | ☐ Provide alternate lighting<br>☐ Wait or defer work until visibility improves<br>☐ No work over water that could require rescue (including sea state) | ☐ Provide induction or training for new workers<br>☐ Mentor, coach, or supervise<br>☐ Verify competencies, skills, and experience<br>☐ Address applicable limitations (fatigue, exhaustion, and restricted duty)<br>☐ Manage multiple languages | ☐ Discuss confined space entry safe work practice<br>☐ Conduct atmospheric testing<br>☐ Monitor access or entry<br>☐ Protect surfaces from inadvertent contact<br>☐ Do not locate mobile engines near confined space<br>☐ Provide observer<br>☐ Develop rescue plan | ☐ Follow SIMOPS matrix<br>☐ MOC required for deviation from SIMOPS restrictions<br>☐ Interface between groups<br>☐ Use barriers and signs to segregate activities<br>☐ Have permit counter signed by leader of affected groups | ☐ Implement controls for slippery surfaces<br>☐ High winds - goggles<br>☐ Heat - hydration, breaks<br>☐ Cold - PPE, heaters<br>☐ Lightening - tool selection, defer work | ☐ Remove, isolate, or contain combustible materials<br>☐ Provide firefighting equipment<br>☐ Construct a fire-safe habitat<br>☐ Provide a fire watch during and after hot work<br>☐ Conduct continuous gas testing<br>☐ Bond or earth for static electricity or cathodic protection |
| **Hazardous Substance** | **Potential Spills** | **Equipment Hot or Cold** | **High Noise** | **Falling or Dropped Objects** | **Lifting Equipment** | **Work at Heights** |
| ☐ Drain or purge equipment<br>☐ Follow MSDS controls<br>☐ Implement health hazards controls (Lead, Asbestos, $H_2S$, Iron Sulfide, Sulfur Dioxide, NORM)<br>☐ Test or analyze material | ☐ Drain equipment<br>☐ Provide spill containment equipment<br>☐ Have spill clean up materials and equipment on hand<br>☐ Restrain and isolate hoses when not in use | ☐ Heat or cool equipment before work starts<br>☐ Install barriers<br>☐ Provide warning signs<br>☐ Implement cold temperature and brittle failure controls<br>☐ Wear thermal gloves | ☐ Wear correct hearing PPE<br>☐ Manage exposure times<br>☐ Shutdown equipment<br>☐ Use "quiet" tools<br>☐ Use sound barriers or curtains<br>☐ Provide or use suitable communication techniques | ☐ Use signs and barriers to restrict entry or access under work at elevation<br>☐ Use lifting equipment to raise tools to or from the work platform<br>☐ Secure tools (tie-off) | ☐ Confirm lifting equipment condition and certification<br>☐ Obtain approval for lifts over processing equipment<br>☐ Have a documented and approved lift plan | ☐ Discuss working at heights safe work practice<br>☐ Verify fall restraint and arrest equipment certification<br>☐ Apply abseiling safe work practice |
| **Portable Electrical Equipment** | **Radiation Hazard** | **Moving Objects or Equipment** | **Manual Handling** | **Equipment and Tools** | **Vibrating Equipment** | **Slips, Trips, and Falls** |
| ☐ Inspect equipment for condition and test date currency<br>☐ Implement continuous gas testing<br>☐ Protect electrical leads from impact or damage | ☐ Use barriers and signs to restrict access<br>☐ Notify personnel who may be affected<br>☐ Implement NORM controls<br>☐ Conduct RAD testing | ☐ Confirm machinery guard integrity<br>☐ Provide protective barriers<br>☐ Observer to monitor proximity of people and equipment<br>☐ Shut down or lock out equipment<br>☐ Do not work in the line of fire | ☐ Assess manual handling task<br>☐ Limit load size<br>☐ Manage posture<br>☐ Confirm stability of load and work platform<br>☐ Get assistance or mechanical aid to avoid pinch points | ☐ Inspect equipment and tools<br>☐ No use of modified tools<br>☐ Use protective guards<br>☐ Use correct tools and equipment for task<br>☐ Protect or remove sharp edges<br>☐ Apply hand safety principles | ☐ Manage exposure times<br>☐ Assess affect of vibration on equipment<br>☐ Use low vibration equipment<br>☐ Apply noise controls | ☐ Identify and shield uneven surfaces or projections<br>☐ Secure or cover cables, cords, and tubing<br>☐ Clean up liquids<br>☐ Barricade or rope-off openings and holes |
| **High Energy or High Voltage** | **Excavations** | **Waste Clean Up and Disposal** | **Other Energy Sources** | **Mobile Equipment** | **Other Hazards** | **Emergency Response** |
| ☐ Restrict access to authorized personnel only<br>☐ Discharge equipment and make electrically dead<br>☐ Observe safe work distances from live cables<br>☐ Use flash burn PPE suit<br>☐ Use insulated gloves, tools, and mats | ☐ Have an excavation plan or safe work practice<br>☐ Locate underground pipes or cables by hand digging<br>☐ De-energize underground services<br>☐ Implement confined space entry controls | ☐ Apply environmental management practices<br>☐ Follow site waste management procedures<br>☐ Clean up equipment and materials at site<br>☐ Optimize task to minimize waste production | ☐ Spring compression or expansion control<br>☐ Implement electromagnetic (radio) controls<br>☐ Manage pressure or vacuum<br>☐ Manage heat generating processes<br>☐ Use seismic activity safe work practice | ☐ Assess equipment condition<br>☐ Implement controls on users or access<br>☐ Limit and monitor proximity to live equipment or cables<br>☐ Manage overhead hazards<br>☐ Adhere to road and site rules | ☐ Implement abrasive blasting controls (for equipment and practices)<br>☐ Prepare a dive plan<br>☐ Manage potential blocked or plugged equipment<br>☐ MOC required for temporary connections or modifications | ☐ Keep egress route open<br>☐ Keep shower and eye wash stations accessible<br>☐ Have a rescue plan in place<br>☐ Keep emergency alarm, fire equipment, and shutdown locations unobstructed |

*Continued*

DocuSign Envelope ID: DBC83A32-C98A-4963-9E1E-44593247DA33



## Pre-Job Planning, Continued

**Task Hazard Assessment (THA),** continued

The purpose of the THA is to:

- Conduct a preliminary identification of potential hazards to personnel, the environment, and the facilities.
- Conduct preliminary identification of controls to eliminate or mitigate these hazards.
- Evaluate the acceptability of any residual risk and to determine other processes, methods, and safeguards required to further eliminate or minimize risk such as a Risk Assessment.

A THA is conducted during planning and before the execution of any work requiring a permit or JSA only. A separate THA form is provided in Section 2.3, "Tools," to be taken to the work site to help identify specific hazards for the planned scope of work.

Specific hazards identified using the THA **must** have specific controls identified in the JSA to manage them. The last minute Risk Assessment (LMRA) process is used to manage hazards that do not have specific actionable controls.

Inherent hazards and controls identified for the job are transferred into the electronic permit in ePTWS for completeness and future copying of the permit. Inherent hazards of the job can be identified well in advance of the job or on the day.

Immediate hazards of the location, environment, and circumstances of the day can be identified using the THA form and can be hand written onto the JSA at the work site.

**Reference:** Section 2, "Tools," JSA Task Hazard Assessment Form

If the job is a non-permitted activity the paper THA included in the JSA is used.

**Job Safety Analysis**

A Job Safety Analysis (JSA) is a prerequisite for all work requiring a permit. Reference JSAs (archived or historical) can be used; however, the JSA **must** be reviewed and updated accordingly to reflect the specific work being conducted and the immediate hazards and controls (these can be hand written onto the JSA).

*Continued*

DocuSign Envelope ID: DBC83A32-C98A-4963-9E1E-44593247DA33



## Pre-Job Planning, Continued

**JSA use in EMPC**

The following guidance represents the *minimum* expectations for the use of the JSA within ExxonMobil Production Company (EMPC). Production Units (PUs) may establish broader local requirements for the use of JSAs. At a minimum, if a permit is required for a task, a JSA is also required.

Critical Work and Confined Space Entry permits apply to all areas of a PU (four and two permit areas) except those controlled by other functions.

Tasks normally covered by the Hot or General Work Permits require a JSA, even when a permit is not required.

> **Reference:** Section 3, "Permit to Work"
>
> Note: A General or Hot Work Permit may not be required due to the location of the activity or because the PU has designated that the activity can be conducted without a permit.

The following additional tasks not listed under any of the permit categories in Section 3 still require a JSA:

- Individuals intending to lift an object or materials of over 50 lb (23 kg)
- Non-routine operations (such as, startup and shutdown) not covered by a procedure or Safe Work Practice
- Work in close proximity to hazardous energy sources (for example, overhead and underground power lines, flaring or venting locations, and areas with high pressure release)
- Operating a crane or lifting device, including manual winch, chain fall, and so on
- Operating mobile equipment, such as forklift, man lift, scissor lift (excludes routine vehicle driving)
- Bulk hose transfers of fuel, oil, and chemicals
- Draining or venting to atmosphere unless the residual pressure being vented is below flare or closed drain pressures
- In all cases where temporary hoses are used to drain or vent hydrocarbons, flammables, or toxic substances to atmosphere
- Loading and unloading supply vessels
- Tasks where use of JSA is specified in the procedure, work practice, or instructions

  ! **IMPORTANT:** Any jobs that are not covered by a Permit or listed above should be discussed with the Supervisor to determine if a JSA is required.

*Continued*

DocuSign Envelope ID: DBC83A32-C98A-4963-9E1E-44593247DA33



# Pre-Job Planning, Continued

**JSA process**

If an existing JSA (reference JSA) is not available or is not adequate, it **must** be updated or a new JSA **must** be produced by the Permit Holder or designate.

**References:**

Section 2, "Tools," for the complete Job Safety Analysis Form

- Figure 2-2, JSA Task Hazard Assessment Form
- Figure 2-3, JSA Review & Hazard Management Form

Figure 2-4 JSA Review & Hazard Management Form

| EMPC | JOB SAFETY ANALYSIS – REVIEW & HAZARD MANAGEMENT FORM | | | January 2017 |
|---|---|---|---|---|
| Facility / Site: 1 | Location within Site: | Permit No: | Permit Type: | Date: |
| Job Description (include Equipment Numbers as Practical): | | | | |

| JSA REVIEW | JSA REVIEWER (SUPERVISOR OR DESIGNATE) | |
|---|---|---|
| Pending confirmation by the Job Leader of site conditions, I agree that the attached JSA identifies the significant Job Phases, Hazards, and Controls.<br>Note: JSA Reviewer signature not required if JSA is part of a Permit Pack. | SIGNATURE: 5<br>NAME (PRINT): | Company: |

| WORK SITE VERIFICATION | COMPLETE THE SECTION BELOW IF THIS JSA IS NOT PART OF A PERMIT PACK (Sign on to the Permit Declaration if this JSA is associated with a Permit Pack) | |
|---|---|---|
| The Work Team has assessed the worksite conditions and confirms:<br>• The JSA addresses the applicable hazards and necessary controls.<br>• The Team has the appropriate resources (people and equipment) to do the job safely.<br>• Others that could be affected by the work have been informed.<br>• Energy isolation (if applicable) has been VERIFIED and DEMONSTRATED.<br>JOB LEADER SIGNATURE: 7 | 8 Work Team Declaration:<br>I acknowledge that I have reviewed the attached JSA, I understand my roles and responsibilities, and I will comply with the instructions for this job. | |
| | Name (print): | Name (print): |
| | | |
| | | |
| | | |
| NAME (PRINT): / Company: | | |

**Complete Job Phases / Potential Hazards / Hazard Controls PRIOR to the JSA Reviewer. Complete Assigned Person AT THE WORK SITE (after JSA Reviewer has signed)**

| 2 JOB PHASES (Description) | 3 POTENTIAL HAZARDS (What could go wrong?) | 4 HAZARDS CONTROLS (How can harm be prevented?) | ASSIGNED PERSON Name 6 | Complete 9 |
|---|---|---|---|---|
| | | | | |
| | | | | |
| | | | | |
| | | | | |
| | | | | |
| | | | | |
| | | | | |
| | | | | |
| | | | | |
| | | | | |
| | | | | |
| | | | | |
| | | | | |

10 Lessons Learned: Describe difficulties encountered while performing the job, or any activities, steps or safeguards that could be improved if the job is performed again in the future.

*Continued*

DocuSign Envelope ID: DBC83A32-C98A-4963-9E1E-44593247DA33



## Pre-Job Planning, Continued

**JSA process**s, continued

The following table provides guidance for completing the JSA documentation. Each task corresponds to a number on the previous figure.

Table 2-1 JSA Process Details

| | |
|---|---|
| 1. | JSA Heading (JSA Review & Hazard Management Form) *administrative data:*<br>▪ Facility/Location within facility<br>▪ Work permit (if applicable) & Permit Type<br>▪ Date/dates<br>▪ Description of Job: Describe the scope of work; include specific equipment designations and numbers as practical and relevant. |
| 2. | Job Phases (Descriptions) List the key Phases and associated task:<br>▪ Preparation<br>▪ Execution<br>▪ Reinstatement<br>▪ General Safety |
| 3. | Potential Hazards (What could go wrong?) Refer to the THA:<br>▪ List the specific potential hazards associated with each task. |
| 4. | Hazards Controls (How can harm be prevented?) Refer to the THA:<br>▪ List the specific control, action, or barrier to mitigate the potential hazard. |
| 5. | JSA Reviewer (Review & Hazard Management Form):<br>▪ JSA Reviewer is typically a functional supervisor, other competent craftsperson not on the Work Team, or Area Authority knowledgeable in the task or their designate.<br>▪ JSA Review is a preliminary check that appropriate specific hazards and mitigations are identified—done prior to toolbox talk and final site check.<br>▪ JSA Review is not authorization or approval for the job—Area Authority authorizes the permit for the work.<br>▪ Where a Work Permit is required, JSA Review **must** be conducted prior to permit authorization.<br>▪ JSA Reviewer works directly with Task Leader to edit the JSA if changes are needed. |

*Continued*

DocuSign Envelope ID: DBC83A32-C98A-4963-9E1E-44593247DA33



# Pre-Job Planning, Continued

**JSA process**, continued

| Task | Action |
|---|---|
| 6. | Assigned Person (Review & Hazard Management Form)<br>▪ For each identified safeguard, Task Leader assigns a team member to "Champion" the implementation of the safeguard before and during the task.<br>▪ Examples of Assigned Person activities:<br>– Ensure that everyone on the team is wearing goggles due to the high wind conditions.<br>– Erect a barrier around the pipe protruding from the ground near the work site.<br>– Maintain the area around the eye wash station clear of obstructions.<br>▪ Each person on the team should be an Assigned Person for at least one safeguard to encourage active safety participation. |
| 7. | Work Site Verification (Review & Hazard Management Form)<br>▪ Site verification is completed immediately prior to start of job as part of the site toolbox talk. "Immediate" hazards identified by the team are added to the JSA (wet ink) and Controls documented and assigned.<br>▪ Task Leader signs JSA to verify that JSA addresses applicable hazards, adequate resources are available to complete the job safely, and communications with others affected by the task are completed. |
| 8. | Work Team Declaration (Review & Hazard Management Form)<br>▪ Team members sign JSA to indicate understanding of the task, necessary safeguards, individual role in task, and commitment to follow designated work practices.<br>– All team members sign prior to beginning work.<br>– Late-arriving members review JSA and sign prior to their start of work.<br>▪ If task is managed with a Work Permit, team members will sign the permit *"Work Team Declaration"* section instead of signing onto the JSA. |
| 9. | Safeguard Completed (Review & Hazard Management Form)<br>▪ Assigned Person “initials” during the task that the identified safeguard is implemented before the step is started. |

*Continued*

DocuSign Envelope ID: DBC83A32-C98A-4963-9E1E-44593247DA33



# Pre-Job Planning, Continued

**JSA process**, continued

| Task | Action |
|---|---|
| 10. | After completion of the task, the work team should briefly review how effectively the task was executed and comment on opportunities to improve future performance. Comments may describe unanticipated difficulties, special site or equipment conditions, other challenges, or suggestions for improving the safety and effectiveness of performing the task in the future.<br>▪ These comments may be used to update the Reference JSA for the task, if applicable. |
| 11. | The Task Hazard Assessment (THA) is used as a reference during JSA creation and throughout the duration of the job as needed to assist in hazard recognition and barrier management. These hazards and safeguards are referred to in the applicable task of the key phases in the Hazard Management section.<br>If additional hazards and/or safeguards are identified at any time, the JSA will be updated appropriately. |

**Safety precautions**

Safety precautions should be identified by considering the work scope, detailed job requirements, THA, and subsequent JSA identified in preparation for documenting them on the work permit or within the Permit Pack. These precautions should not be limited to those listed on the work permit form.

**Interface requirements**

A thorough understanding of the work to be performed and its interfaces with routine operations or other planned work is required. Although practices and policies exist to guide the process of interface identification, parties involved in the work and in the work permit preparation and approval should identify all interfaces that could be impacted adversely.

These interfaces can be:

- A requirement to communicate with others during the work.
- A requirement to coordinate activities with others during the work.
- A physical conflict with other work.
- A safety conflict with other work.
- Too many activities taking place in one area.

The process of identifying interfaces should be taking place during the entire work planning, scheduling, and job safety planning process, but especially in the JSA.

Work or activities that cross shifts or crews require that work status and precautions are communicated across crew and shift changes. Accomplished in several ways:

- Detailed handover notes and meetings
- Permit Pack content
- SIMOPS process

*Continued*

DocuSign Envelope ID: DBC83A32-C98A-4963-9E1E-44593247DA33



# Pre-Job Planning, Continued

**Assignment and communication of job duties**

The assignment and communication of duties are essential to the efficient flow and safe execution of work. Special conditions created as a result of JSAs and SIMOPS evaluation may require that additional job duties be specified.

Reasons for assigning and communicating duties include:

- Understanding the specific responsibilities for personnel involved in the job.
- Giving individuals the authority to carry out their work.
- Assigning stewardship for each job or task step.
- Listing contact points for routine and emergency communications.

**Identify Permit Pack content**

The scope of work for the permit and the JSA can be used with the Permit Pack Matrix to identify the documentation required for the safe execution of the work, for example:

- Permit type
- Job Safety Analysis (JSA)
- Isolation Control Certificate
- Relevant SWP Checklists
- Integrity Critical Procedures (or Integrity Critical Procedure Checklist)
- P&IDs
- Rescue plan
- Lift plan

The Permit Pack Matrix identifies mandatory documents that are required for specific work activities along with other typical documentation that could be considered for use during work execution. The PH in consultation with the AA or AAF determines the required documentation needed in the Permit Pack during the Planning phase.

DocuSign Envelope ID: DBC83A32-C98A-4963-9E1E-44593247DA33



## 2.1.5 Work Team Preparation

**Introduction**

This section provides details on key activities that fall under the Work Team, Job Preparation element of the Work Management process flow. Once the job is planned appropriately and the safety plan is finalized, the work team **must** prepare for the job. These activities culminate in the preparation of the Permit Pack.

**Personnel competencies and experience**

Once the scope of the work is clearly identified and documented, competent people **must** be involved in the execution of the work. Personnel who work on EMPC sites **must** have the required competencies for the activities they will perform and the equipment they will use.

**Work site review, including access and egress**

The need for an inspection of the job site should be determined at the planning stage and may include the following:

- Potential access or egress problems for equipment or personnel
- Requirement for scaffolding or rope access
- Required crane access
- Required lifting devices, including a lifting point review
- Location of safety equipment such as fire extinguishers, fire hoses, chemical showers, eyewash stations, and flame and smoke detectors
- Location of communications equipment such as telephones, call boxes, alarm speakers, and lights
- Location of isolation points, drain points, pressure relief points, and purge points
- Location of potential gas sources and ignition sources
- Location of equipment or control devices that **must** be protected
- Location of drains that **must** be stopped/plugged
- Location of appropriate ventilation intakes
- Areas that **must** be access-restricted during the operation, including the location of barriers and signs

*Continued*

DocuSign Envelope ID: DBC83A32-C98A-4963-9E1E-44593247DA33



## Work Team Preparation, Continued

| | |
|---|---|
| **Work site review, including access and egress,** continued | ▪ Requirements for restricting access due to the following:<br>– Potentially falling objects<br>– Potentially blowing debris or sparks<br>– Potential hydrocarbon escapes<br>– Exposure to high voltage electricity<br>– Exposure to high pressure leaks<br>– Exposure to dangerous chemicals<br>– Exposure to hydrogen sulfide ($H_2S$)<br>– Exposure to asbestos or fibrous materials<br>– Exposure to noise<br>– Exposure to radiation or naturally occurring radioactive material (NORM)<br>– Exposure to explosives |
| **Job procedure review** | Any specific procedures prepared to assist in executing the job safely **must** be reviewed with the work team to ensure that everyone has a clear understanding of how the job will be executed. |
| **JSA review** | The JSA **must** be reviewed prior to the work execution. This review should include:<br>▪ Potential hazards identified in the THA.<br>▪ Identified hazard prevention or mitigation controls (including Life Saving Actions).<br>▪ Potential interface issues identified in the JSA.<br>▪ Assignment of controls verification to team members. |
| **SWP Checklist review** | Safe Work Practice (SWP) Checklists included in the Permit Pack **must** be completed as the job progresses through each phase. SWP Checklists are added to the Permit Pack for review by the AA/AAF. The PH will confirm that any checklist items that are required before the job commences are in place and will ensure that all required checklist items are checked as the job progresses. The PH completes the SWP Checklist items at the Job Site prior to execution.<br>By signing the permit each shift, the PH acknowledges that all Permit Pack requirements are being followed and implemented when required, including the Checklist items.<br>The work team also accept that the checklist items will be addressed when they add their name to the permit or JSA Work Team Declaration.<br>For non-permitted work, signing the JSA will also acknowledge that any checklist items are being followed and implemented when required.<br>**Reference:** Section 3, "Tools" for the available SWP Checklists. |

*Continued*

DocuSign Envelope ID: DBC83A32-C98A-4963-9E1E-44593247DA33



## Work Team Preparation, Continued

**SWP Checklist review,** continued

Checklists are tools to facilitate compliance with Safe Work Practices from job planning through to closeout. Signatures are handled by the permit or JSA (for non-permitted work) processes. Checklists are typically contained on one page.

PUs can have additional SWP Checklists in Appendix A or on the local area network (LAN) or SharePoint but they will not be added to the ePTWS External References.

Line items **must not** be deleted from the SWP Checklists contained in Section 3, "Tools." Justifiable items can be added to a checklist by the PU e.g. regulatory checks.

**Energy isolation and Temporary Defeats**

A review of the requirements for energy isolations and Temporary Defeats required to perform the job **must** take place and may include:

- A documentation review of relevant piping and instrumentation diagrams (P&IDs), process flow diagrams (PFDs), safe charts, electrical drawings, and other facility documentation.
- A physical inspection of the affected facilities so that potential energy sources are identified in the documentation review.
- Identification of drain points, purge points, hydrocarbon test points, and pressure test points.
- The physical marking of isolation, drain, purge, and test points on the plan and on copies of the appropriate documentation. This documentation should be included in the Permit Pack when available.
- Determination of critical devices requiring temporary defeat.

**Permit Pack compilation**

In preparation for the review by the Area Authority at the Daily Work Coordination Meeting, the Work Permit, associated certificates, JSA, SWP Checklists, Integrity Critical Procedures (or Integrity Critical Procedure Checklist) and other required documents in the Permit Pack **must** be prepared. The completed work planning activities serve as inputs for the preparation of the Permit Pack. Based on the work planning activities, typically the Permit Holder commences preparation of the Permit Pack.

The Permit Pack Requirements Matrix (see Figure 2-5) is used to determine what is required in the Permit Pack. The Permit Pack is a collection of documents from the work planning activities based on the complexity of the job. The permit should be the top sheet of a Permit Pack. The Permit Holder, in consultation with the Area Authority and the Area Operator, completes the permit. Once the permit is complete and the identified documents are attached and the Permit Pack is ready to be reviewed.

*Continued*

DocuSign Envelope ID: DBC83A32-C98A-4963-9E1E-44593247DA33



# Work Team Preparation, Continued

**Permit Pack compilation**, continued

**Reference:** Section 2, "Tools," for a stand-alone version of the Permit Pack Requirements Matrix.

Figure 2-5 Work Management System Permit Pack Requirements Matrix

**Work Management System Permit Pack Requirements Matrix**

| Work/Job Activity | Permit Pack Requirements | | | | | |
|---|---|---|---|---|---|---|
| M Mandatory for permit pack<br>R To be reviewed and considered for Permit Pack by Permit Holder, Area Authority, and PIC. | Work Permit | Isolation<br>• LO/TO<br>• Blinding<br>• Defeat | Job Safety Analysis | Safe Work Practice Checklist | Work ** Procedure | Atmospheric Test Record |
| **Hot Work** | M | R | M | M | R | M |
| **Confined Space Entry** | M | M* | M | M | R | M |
| **General Work** | M | R | M | R | R | R |
| **Critical Work:** | | | | | | |
| • Breaking Containment | M | M | M | M | R | R |
| • Critical Lift | M | R | M | M | R | R |
| • Working at Heights | M | R | M | M | R | R |
| • Diving Operations | M | R | M | M | R | R |
| • Ground Disturbance/Excavation | M | R | M | M | R | R |
| • High Risk Electrical | M | R | M | M | R | R |
| • Abrasive Blasting | M | R | M | M | R | R |
| • Spark Potential | M | R | M | R | R | M |
| • Working on Pressurized Systems | M | R | M | R | R | R |
| • Over-the-Side Work | M | R | M | R | R | R |
| • Working in Exposed Locations | M | R | M | R | R | R |

*Isolation requirements may not be needed for certain entry types (such as excavation). Positive isolation required for all entries where hazardous energy exists.

**Where IC Procedure exist for the work activity they must be attached and available at the work site.

**Permit Pack Required Documents:**

- ☐ Atmospheric Test Record
- ☐ Temporary Defeat
- ☐ Isolation Certificate
- ☒ JSA/THA
- ☐ Lifting Plan
- ☐ SDS
- ☐ P&ID/Drawing
- ☐ Normal Procedure
- ☐ IC Procedure
- ☐ Rescue Plan
- ☐ SWP Checklist
- ☐ SIMOP Deviation
- ☐ Work Aid

☐ List Required Checklists: _____

☐ Other (describe): _____

**Cross Referenced Certificates:**

| Type | Certificate/Permit Number(s) | |
|---|---|---|
| Isolation: | | |
| Temporary Defeat: | | |
| Work Permit(s): | | |
| | | |
| | | |

DocuSign Envelope ID: DBC83A32-C98A-4963-9E1E-44593247DA33



## 2.1.6 Work Planning Review and Endorsement

**Introduction**

This section provides details on the key activities that fall under the Work Planning Review and Endorsement element of the Work Management process flow. The intent of these activities is to confirm that the appropriate degree of job and safety planning has taken place, and that all appropriate preparations and precautions are specified and planned for scheduled work.

For break-in or non-scheduled work, the Permit Pack **must** be reviewed by the Area Authority and Area Operator. The Area Authority is responsible for notifying the PIC of this work and ensuring interfaces have been informed. The Permit Holder can assume the role of the Area Authority and Area Operator in a remote location and discuss the proposed activities with the PIC before commencing.

**Permit Pack review**

A review of the Permit Pack is conducted by the Area Authority (AA/AAF) to ensure that it is properly prepared and the necessary documentation is included for safe execution of work. The Area Authority for the Permit Pack *review* can be the Operations or Functional Supervisors.

This review by the Area Authority should include but not be limited to the following:

- Is the correct Work Permit used?
- Has the size and complexity of the task been considered?
- Is the work description adequate and scope clearly defined?
- Are hazards clearly identified and managed with appropriate controls?
- Are the specified preparations and precautions adequate?
- Are the required mechanical, instrument, and electrical isolations specified?
- Are the required Temporary Defeats specified?
- Are the required resources and skills available?
- Are any physical or organizational interfaces addressed?
- Is the JSA adequate?
- Are there any impacts due to SIMOPS?
- Are weather conditions taken into account?
- Is the timing of work execution acceptable?
- Are any specific equipment preparation requirements needed?
- Are applicable Safe Work Practice Checklists attached?
- Are Integrity Critical Procedures (or Integrity Critical Procedure Checklist) identified and attached?
- Are relevant non-Integrity Critical Procedures (or non-Integrity Critical Procedure Checklists) not familiar to the Work Team attached or required?

*Continued*

DocuSign Envelope ID: DBC83A32-C98A-4963-9E1E-44593247DA33



## Work Planning Review and Endorsement, Continued

**Daily Work Coordination Meeting and SIMOPS conflicts**

Daily Work Coordination Meetings (DWCMs) should be attended by the key asset personnel, specifically, the PIC, AA, and functional supervisors.

> **Reference:** Section 2, "Tools," Typical Daily Work Coordination Meeting agenda

The objective of the meeting is to review and coordinate interfacing activities and manage the risks involved with concurrent activities and simultaneous operations (SIMOPS) by evaluating the proposed jobs prior to endorsement. New and suspended permits are reviewed. Non-permitted work that could conflict with planned activities are also discussed at this meeting.

Reviewing the next day's work by location and job type enables Site Management to identify any potential work conflicts and potential interface issues.

> Note: Work conflicts can be controlled by cross-referencing work permits submitted in the facility work plan.

Physical and organizational interfaces are managed so work proceeds safely and efficiently. Physical interfaces can exist when facilities are connected by either hardware (e.g. pipelines) or software (e.g. communications systems or shutdown systems). Organizational interfaces can be within groups (e.g. crews or shifts), between functions (e.g. operations and drilling), or between two facilities (e.g. a diving support vessel working near an offshore platform or between two platforms).

Any change of conditions that can impact the job at any affected location **must** be communicated to other affected facilities as soon as practical. If the change affects the safety of the work being performed, work will cease immediately and the Permit will be suspended. Work will not recommence until the permit is either re-authorized by both facility Area Authorities or a new permit is processed.

In assessing work site conflicts, the SIMOPS Matrix and Restriction Table **must** be consulted.

> **Reference:** Section 6, "Simultaneous Operations"

The PIC should also identify those permits, ICCs and Temporary Defeats that should be assessed at the Daily Work Coordination Meeting. Assessments are assigned to the Functional AA (AAF) for coordination and completion.

**Permit Pack endorsement**

In order for work to progress, the permit will be endorsed by the PIC indicating:

The work is coordinated and approved for implementation as planned.

- There will not be any concurrent activity, SIMOPS, and schedule or resource conflicts.
- Equipment required for isolation can be made available.

*Endorsement* at this stage grants permission to progress the permit.

DocuSign Envelope ID: DBC83A32-C98A-4963-9E1E-44593247DA33



## 2.1.7 Work Site Preparation

| | |
|---|---|
| **Introduction** | This section provides details on the key activities that fall under the Work Site Preparation element of the Work Management process flow. These sections address the equipment and facilities handover process and Work Permit approval process whereby the Area Operator and Area Authority confirm that all requirements for safe and efficient work are met. |
| **Access and egress preparation** | Permit Holder confirms that the site preparations are completed, such as:<br>▪ Access (for example, scaffolding).<br>▪ Egress (for example, rerouted emergency routes are established and signed). |
| **Required Safety Equipment** | Permit Holder confirms that all required safety equipment is on location. The required safety equipment will be identified in several documents and practices:<br>▪ Permit<br>▪ JSA<br>▪ Procedures and procedure checklists<br>▪ Checklists<br>▪ Upstream Safety Manual<br>▪ This Work Management System<br>▪ Special equipment required by the activity itself e.g. welders mask/shield, electricians insulated gloves, etc. |
| **Required Communication Equipment** | Many locations have communication equipment readily available around the facility but special equipment is required at times for high noise activities or confined space entries. The work team **must** be familiar with the operation of these systems and contacts for normal or emergency situations. |
| **Temporary Defeats** | Required temporary defeats **must** be put in place as required by the scope of the work. These **must** be identified and implemented in cooperation with the relevant people e.g. Area Operator, Control Room Operator and Area Authority. |
| **Energy Isolations** | All required isolations of energy sources **must** be conducted in a manner consistent with Section 4 of this manual. Confirmation that the isolations are correct for the proposed work **must** be conducted. |

DocuSign Envelope ID: DBC83A32-C98A-4963-9E1E-44593247DA33



## 2.1.8 Work Authorization

| | |
|---|---|
| **Introduction** | On the day of the proposed work, the permits are authorized, issued and accepted. Authorization will not be given until the Area Authority conducts a final check of activities already underway or proposed to confirm that the job can proceed safely. |
| **Permit Pack authorized** | Area Authority *Authorizes* the Permit Pack if the work can proceed as planned. The Area Authority role for authorizing the work is assumed by Operations except for remote field operations where Operations personnel may not be present. |
| **Zero Energy verified and demonstrated** | A completed isolation plan will be reviewed by the Area Operator with the Permit Holder and Zero Energy is demonstrated to the Permit Holder prior to signing the permit. Each individual working on the job has the right to request Zero Energy be demonstrated.<br><br>When demonstration of Zero Energy to the Permit Holder is impractical (for example, diving operations or remote field locations), the deliberate step of confirming Zero Energy will be specifically delegated to the Permit Holder. |
| **Work Permit issue and acceptance** | Permit *Issue* by the Area Operator is formal permission for the work to proceed.<br><br>The permit can then be *Accepted* electronically by the Permit Holder. The permit is not considered "Live" in the field until the Area Operator and Permit Holder sign the printed permit. Worksite controls required for the job to commence **must** be in place and documented (e.g. JSA and SWP Checklists controls).<br><br>The Work Team signs onto the Work Team Declaration section of the printed permit after the Toolbox meeting acknowledging their understanding of the job, their role in the job and their requirements for safe execution. |

DocuSign Envelope ID: DBC83A32-C98A-4963-9E1E-44593247DA33



## 2.1.9 Work Execution

**Overview**

The Work Execution element of the Work Management process flow involves accomplishment of the work activities.

Prior to work execution, the Permit Holder **must** arrange a work site toolbox meeting with the Work Team to discuss the Permit Pack, including a review and update of the JSA to reflect the immediate hazards of the day. This toolbox meeting **must** take place at the start of each shift and when conditions change. This meeting enables the Permit Holder to:

- Get the Work Team focused on the job, safety, and communication.
- Discuss work activities in the immediate area that may conflict.
- Address information such as:
  - Individual roles and assigned JSA responsibilities
  - Written procedure(s) for the work
  - Relevant Safe Work Practice Checklists
  - Safety aspects of the work and written safety precautions
  - Emergency response and muster stations
  - Equipment, tools, and materials to be used
  - Atmospheric testing plan
  - Maintaining a safe and orderly work site
  - Applying last minute Risk Assessment (LMRA) throughout the job
  - Changes in work scope and environment

DocuSign Envelope ID: DBC83A32-C98A-4963-9E1E-44593247DA33



## 2.1.10 Work Closeout

**Overview**

The Closeout element of the Work Management process flow ends the work execution activities and initiates documentation activities that are critical to the Work Management System.

A key aspect of properly closing out the work is the equipment and facility reinstatement activities. The general sequence of reinstatement can include:

- Re-commissioning
- Purging
- Leak testing
- Verification of isolation status
- Removing energy isolations (process, mechanical, and electrical)
- Acceptance testing
- Removing temporary defeats of critical devices
- Capturing lessons learned
- Work site cleanup
- Permit closeout

DocuSign Envelope ID: DBC83A32-C98A-4963-9E1E-44593247DA33



# 2.2 Verification, Measurement, and KPIs

**Overview**

The Production Unit (PU) is responsible for managing and conducting measurement and verification activities, including the collection and reporting of key performance indicators (KPIs) to the Operations Manager.

The PU is also responsible for monitoring and evaluating the effectiveness of the data taken to address any negative trending or unacceptable results related to the indicators reported.

Additional indicators may be developed and reported for specific purposes or periods of time; however, standard key performance indicators to be reported are described in the EMPC PU's Verification and Measurement Guide, OIMS System 6-4 and the EMPC Personnel Safety Leading Indicators Guide.

**Introduction**

Assessments **must** be conducted to verify that all permitted work is in compliance with the Work Management System (WMS) and performance improvement opportunities are identified and addressed.

The Work Management review process involves management oversight of permit-to-work activities leading to a continuous improvement effort. The Work Management review process is intended to confirm that:

- Work Permits are being used consistently and correctly on a daily basis for work on company facilities.
- Isolations are compliant with the WMS and Zero Energy demonstration is occurring.
- Temporary Defeats are being managed safely and adequate alternative controls are implemented when equipment will remain in service. Risk Assessments are requested, when necessary.
- The Work Permitting process is effective at achieving safe and efficient work and compliance with the Life Saving Actions.

**Work site inspections**

Work site inspections are the periodic, on-site inspection of work by Site Management. Management's first line inspection of work activities generally provides an early indication of the level of compliance with the Work Management System. It consists mainly of supervisors, leads, or designates (including contractors) proactively visiting job sites to verify that appropriate controls are included in the Permit Pack and personnel working on the job are implementing these controls.

*Continued*

DocuSign Envelope ID: DBC83A32-C98A-4963-9E1E-44593247DA33



## Verification, Measurement, and KPIs, Continued

**PTWS assessments**

Site Management (or designates) **must** perform assessments to meet the Work Management System V&M requirements.

An assessment tool is built into the ePTWS to facilitate these reviews and reports. The tool assesses Permits (including the JSA), Isolations, and Temporary Defeats. These assessments are also included in Section 2, "Tools," for PUs that do not have ePTWS (for example, fields nearing end of life or a new facility still being commissioned). PUs, as part of their OIMS System verification and measurement processes, establishes methods to check the status and effectiveness of their systems.

**Capturing improvement opportunities**

Results of WMS assessments that identify work permitting compliance issues or improvement opportunities should be shared with the local work teams and issues **must** be closed out in a timely manner. Significant learnings or improvement opportunities should be shared with the OIMS System 6-4 Owner, Administrator, and subject matter experts (SMEs) and stewarded to closeout.

Supervisors, leads, or designates can conduct an assessment, the "Assessor Privilege" should be assigned to an individual if they will be required to record assessments in ePTWS. The assessments can be assigned at the Daily Work Coordination Meeting or assigned during the day.

The assessments are *Reviewed* by the AA or PIC to confirm the quality of the assessments, add comments, and agree or reject any action items identified.

The assessments are then *Management Reviewed* by the PIC who adds comments.

*Continued*

DocuSign Envelope ID: DBC83A32-C98A-4963-9E1E-44593247DA33



## Verification, Measurement, and KPIs, Continued

**Permit Pack assessments**

Periodic assessments are conducted to verify that the users are following the WMS requirements. It is the responsibility of Site Management to assign and confirm that WMS assessments are performed.

The recommended approach to assessments is to follow the work management process flow from the work planning stage through to job closeout and reinstatement to confirm that all elements of the work flow are being correctly executed in the field.

- **Field Assessments:** At least 4% of Permitted activities **must** be "field" assessed to verify compliance with the WMS expectations during work execution.
- **Desktop Assessments:** At least 1% of Permit Packs **must** be assessed using a "desktop" review process to determine if they are correctly completed, required documents attached (e.g. Integrity Critical Procedures (or Integrity Critical Procedure Checklist) and Safe Work Practice Checklists), and the quality of the information is satisfactory (e.g. Job Scope, THA and JSA).

Sample size should be increased in areas where relatively few Permit Packs are processed to ensure regular field engagement and monitoring. A higher percentage of assessments should be conducted for higher risk jobs such as Confined Space Entry (CSE), Hot Work and other LSA activities. Permits to be assessed should be discussed and assigned at the Daily Work Coordination Meeting.

Only the *Management Reviewed* assessments will count in the percentage assessed figures above.

**Reference:** Section 2, "Tools," for the Work Management System Assessment Tool

DocuSign Envelope ID: DBC83A32-C98A-4963-9E1E-44593247DA33

DocuSign Envelope ID: DBC83A32-C98A-4963-9E1E-44593247DA33



# 2.3 Tools

**Forms and tools**

These forms are referenced in this section and listed on following pages:

2.3.1 Job Safety Analysis Form
2.3.2 Permit Pack Requirements Matrix
2.3.3 Daily Work Coordination Meeting Agenda
2.3.4 Assessment Form – PTW In-Field
2.3.5 Assessment Form – PTW Desktop
2.3.6 Assessment Form – JSA In-Field
2.3.7 Assessment Form – JSA Desktop
2.3.8 Assessment Form – ICC In-Field
2.3.9 Assessment Form – ICC Desktop
2.3.10 Assessment Form – TD In-Field
2.3.11 Assessment Form – TD Desktop
2.3.12 Assessment Tracking Register
2.3.13 Life Saving Action Pages

DocuSign Envelope ID: DBC83A32-C98A-4963-9E1E-44593247DA33

| EMPC | JOB SAFETY ANALYSIS – REVIEW & HAZARD MANAGEMENT FORM | Jan 2017. |
|---|---|---|

| Facility / Site: | Location within Site: | Permit No: | Permit Type: | Date: |
|---|---|---|---|---|

**Job Description** (include Equipment Numbers as Practical):

| JSA REVIEW | JSA REVIEWER (SUPERVISOR OR DESIGNATE) | |
|---|---|---|
| Pending confirmation by the Job Leader of site conditions, I agree that the attached JSA identifies the significant Job Phases, Hazards, and Controls.<br>**Note: JSA Reviewer signature not required if JSA is part of a Permit Pack.** | **SIGNATURE:**<br><br>**NAME (PRINT):** | **Company:** |

| WORK SITE VERIFICATION | | COMPLETE THE SECTION BELOW IF THIS JSA IS NOT PART OF A PERMIT PACK<br>(Sign on to the Permit Declaration if this JSA is associated with a Permit Pack) | |
|---|---|---|---|
| The Work Team has assessed the worksite conditions and confirms:<br>• The JSA addresses the applicable hazards and necessary controls.<br>• The Team has the appropriate resources (people and equipment) to do the job safely.<br>• Others that could be affected by the work have been informed.<br>• Energy isolation (if applicable) has been VERIFIED and DEMONSTRATED.<br><br>**JOB LEADER SIGNATURE:** | | **Work Team Declaration:**<br>**I acknowledge that I have reviewed the attached JSA, I understand my roles and responsibilities, and I will comply with the instructions for this job.** | |
| | | **Name (print):** | **Name (print):** |
| | | | |
| | | | |
| | | | |
| **NAME (PRINT):** | **Company:** | | |

**Complete Job Phases / Potential Hazards / Hazard Controls PRIOR to the JSA Reviewer. Complete Assigned Person AT THE WORK SITE (after JSA Reviewer has signed)**

| JOB PHASES (Description) | POTENTIAL HAZARDS (What could go wrong?) | HAZARDS CONTROLS (How can harm be prevented?) | ASSIGNED PERSON | |
|---|---|---|---|---|
| | | | Name | Complete |
| | | | | |
| | | | | |
| | | | | |
| | | | | |
| | | | | |
| | | | | |
| | | | | |
| | | | | |
| | | | | |
| | | | | |
| | | | | |
| | | | | |
| | | | | |
| | | | | |

Lessons Learned: Describe difficulties encountered while performing the job, or any activities, steps or safeguards that could be improved if the job is performed again in the future.

DocuSign Envelope ID: DBC83A32-C98A-4963-9E1E-44593247DA33



**This table of Hazards and Controls can assist the work group to manage hazards for the proposed job. The table does not include all possible hazards. It is expected that the required PPE for the activity and work conditions will be used. Determine the Hazards that are present for the job and identify the Controls to be implemented.**

| Pressurized Equipment | Poor Lighting or visibility | Personnel | Confined Space | Simultaneous Operations (SIMOPS) | Weather | Ignition Sources |
|---|---|---|---|---|---|---|
| ☐ Perform isolation – LO/TO, blinding, or defeat | ☐ Provide alternate lighting | ☐ Provide induction or training for new workers | ☐ Discuss confined space entry safe work practice | ☐ Follow SIMOPS matrix | ☐ Implement controls for slippery surfaces | ☐ Remove, isolate, or contain combustible materials |
| ☐ Depressurize, drain, purge, and vent | ☐ Wait or defer until visibility improves | ☐ Mentor, coach, or supervise | ☐ Conduct atmospheric testing | ☐ MOC required for deviation from SIMOPS restrictions | ☐ High winds – goggles | ☐ Provide firefighting equipment |
| ☐ Relieve trapped pressure | ☐ No work over water that could require rescue (including sea state) | ☐ Verify competencies, skills, and experience | ☐ Monitor access or entry | ☐ Interface between groups | ☐ Heat – hydration, breaks | ☐ Construct a fire-safe habitat |
| ☐ Avoid auto-refrigeration when depressurizing | | ☐ Address applicable limitations (fatigue, exhaustion, and restricted duty) | ☐ Protect surfaces from inadvertent contact | ☐ Use barriers and signs to segregate activities | ☐ Cold – PPE, heaters | ☐ Provide a fire watch during and after hot work |
| ☐ Anticipate residual pressure or fluids | | ☐ Manage multiple languages | ☐ Do not locate mobile engines near confined space | ☐ Have permit counter signed by leader of affected groups | ☐ Lightening – tool selection, defer work | ☐ Conduct continuous gas testing |
| ☐ Secure temporary hoses | | | ☐ Provide observer | | | ☐ Bond or earth for static electricity or cathodic protection |
| | | | ☐ Develop rescue plan | | | |

| Hazardous Substance | Potential Spills | Equipment Hot or Cold | High Noise | Falling or Dropped Objects | Lifting Equipment | Work at Heights |
|---|---|---|---|---|---|---|
| ☐ Drain or purge equipment | ☐ Drain equipment | ☐ Heat or cool equipment before work starts | ☐ Wear correct hearing PPE | ☐ Use signs and barriers to restrict entry or access under work at elevation | ☐ Confirm lifting equipment condition and certification | ☐ Discuss working at heights safe work practice |
| ☐ Follow SDS controls | ☐ Provide spill containment equipment | ☐ Install barriers | ☐ Manage exposure times | ☐ Use lifting equipment to raise tools to or from the work platform | ☐ Obtain approval for lifts over processing equipment | ☐ Verify fall restraint and arrest equipment certification |
| ☐ Implement health hazards controls (Lead, Asbestos, $H_2S$, Iron Sulfide, Sulfur Dioxide, NORM) | ☐ Have spill cleanup materials and equipment on hand | ☐ Provide warning signs | ☐ Shutdown equipment | ☐ Secure tools (tie-off) | ☐ Have a documented and approved lift plan | ☐ Apply abseiling safe work practice |
| ☐ Test or analyze material | ☐ Restrain and isolate hoses when not in use | ☐ Implement cold temperature and brittle failure controls | ☐ Use "quiet" tools | | | |
| | | ☐ Wear thermal gloves | ☐ Sound barriers or curtains | | | |
| | | | ☐ Provide or use suitable communication techniques | | | |

| Portable Electrical Equipment | Radiation Hazard | Moving Objects or Equipment | Manual Handling | Equipment and Tools | Vibrating Equipment | Slips, Trips, and Falls |
|---|---|---|---|---|---|---|
| ☐ Inspect equipment for condition and test date currency | ☐ Use barriers and signs to restrict access | ☐ Confirm machinery guard integrity | ☐ Assess manual handling task | ☐ Inspect equipment and tools | ☐ Manage exposure times | ☐ Identify and shield uneven surface or projections |
| ☐ Implement continuous gas testing | ☐ Notify personnel who may be affected | ☐ Provide protective barriers | ☐ Limit load size | ☐ No use of modified tools | ☐ Assess effect of vibration on equipment | ☐ Secure or cover cables, cords, and tubing |
| ☐ Protect electrical leads from impact or damage | ☐ Implement NORM controls | ☐ Observer to monitor proximity of people and equipment | ☐ Manage posture | ☐ Use protective guards | ☐ Use low vibration equipment | ☐ Clean up liquids |
| | ☐ Conduct RAD testing | ☐ Shut down or lockout equipment | ☐ Confirm stability of load and work platform | ☐ Use correct tools and equipment for task | ☐ Apply noise controls | ☐ Barricade or rope-off openings and holes |
| | | ☐ Do not work in the line of fire | ☐ Get assistance or mechanical aid to avoid pinch points | ☐ Protect or remove sharp edges | | |
| | | | | ☐ Apply hand safety principles | | |

| High Energy or High Voltage | Excavations | Waste Clean Up and Disposal | Other Energy Sources | Mobile Equipment | Other Hazards | Emergency Response |
|---|---|---|---|---|---|---|
| ☐ Restrict access to authorized personnel only | ☐ Have an excavation plan or safe work practice | ☐ Apply environmental management practices | ☐ Spring compression or expansion control | ☐ Assess equipment condition | ☐ Implement abrasive blasting controls (for equipment and practices) | ☐ Keep egress route open |
| ☐ Discharge equipment and make electrically dead | ☐ Locate underground pipes or cables by hand digging | ☐ Follow site waste management procedures | ☐ Implement electromagnetic (radio) controls | ☐ Implement controls on users or access | ☐ Prepare a dive plan | ☐ Keep shower and eye wash stations accessible |
| ☐ Observe safe work distances for live cables | ☐ De-energize underground services | ☐ Clean up equipment and materials at site | ☐ Manage pressure or vacuum | ☐ Limit and monitor proximity to live equipment or cables | ☐ Manage potential blocked or plugged equipment | ☐ Have a rescue plan in place |
| ☐ Use flash burn PPE suit | ☐ Implement confined space entry controls | ☐ Optimize task to minimize waste production | ☐ Manage heat generating processes | ☐ Manage overhead hazards | ☐ MOC required for temporary connections or modifications | ☐ Keep emergency alarm, fire equipment, and shutdown locations unobstructed |
| ☐ Use insulated gloves, tools, and mats | | | ☐ Use seismic activity safe work practice | ☐ Adhere to road and site rules | | |

DocuSign Envelope ID: DBC83A32-C98A-4963-9E1E-44593247DA33

# Work Management System Permit Pack Requirements Matrix

| Work/Job Activity | Permit Pack Requirements | | | | | |
|---|---|---|---|---|---|---|
| M Mandatory for permit pack<br>R To be reviewed and considered for Permit Pack by Permit Holder, Area Authority, and PIC. | Work Permit | Isolation<br>• LO/TO<br>• Blinding<br>• Defeat | Job Safety Analysis | Safe Work Practice Checklist | Work ** Procedure | Atmospheric Test Record |
| **Hot Work** | M | R | M | M | R | M |
| **Confined Space Entry** | M | M* | M | M | R | M |
| **General Work** | M | R | M | R | R | R |
| **Critical Work:** | | | | | | |
| • Breaking Containment | M | M | M | M | R | R |
| • Critical Lift | M | R | M | M | R | R |
| • Working at Heights | M | R | M | M | R | R |
| • Diving Operations | M | R | M | M | R | R |
| • Ground Disturbance/Excavation | M | R | M | M | R | R |
| • High Risk Electrical | M | R | M | M | R | R |
| • Abrasive Blasting | M | R | M | M | R | R |
| • Spark Potential | M | R | M | R | R | M |
| • Working on Pressurized Systems | M | R | M | R | R | R |
| • Over-the-Side Work | M | R | M | R | R | R |
| • Working in Exposed Locations | M | R | M | R | R | R |

*Isolation requirements may not be needed for certain entry types (such as excavation). Positive isolation required for all entries where hazardous energy exists.

**Where IC Procedure exist for the work activity they must be attached and available at the work site.

## Permit Pack Required Documents:

- ☐ Atmospheric Test Record
- ☐ Temporary Defeat
- ☐ Isolation Certificate
- ☒ JSA/THA
- ☐ Lifting Plan
- ☐ SDS
- ☐ P&ID/Drawing
- ☐ Normal Procedure
- ☐ IC Procedure
- ☐ Rescue Plan
- ☐ SWP Checklist
- ☐ SIMOP Deviation
- ☐ Work Aid

☐ List Required Checklists: _____

☐ Other (describe): _____

## Cross Referenced Certificates:

| Type | Certificate/Permit Number(s) | |
|---|---|---|
| Isolation: | | |
| Temporary Defeat: | | |
| Work Permit(s): | | |
| | | |
| | | |

DocuSign Envelope ID: DBC83A32-C98A-4963-9E1E-44593247DA33

# Daily Work Coordination Meeting (DWCM) – Typical Agenda

| Description | Reference | Responsibility |
|---|---|---|
| **Establish Status of Activities**<br>Review ongoing live and suspended permits & JSAs.<br>Identify those jobs that continue the next day that must be considered for SIMOPS conflicts or congestion (too many jobs in one area to manage safely). | PTW search | AAF (discuss status) |
| **Review new work permits & JSAs**<br>Discuss *Reviewed* Permit Packs and JSA work to be conducted the next day.<br>Each Functional Supervisors to discuss readiness:<br>• Parts available, cranes organized, scaffolds in place, weather suitable, resources organized, and so forth.<br>• Discuss availability of equipment from operations.<br>• Identify isolation requirements.<br>• Discuss JSA only work.<br>• Review of Life Saving Action Activities. | PTW search | AAF to have planned permits in the *Reviewed* state before the meeting |
| **Temporary Defeats:**<br>Review *Requested* and applied TDs. | TD search | AAs (discuss status) |
| **Assess SIMOPS and concurrent work interfaces**<br>• Navigate through the graphics looking for SIMOPS conflicts or congestion, (number of jobs in an area).<br>• Discussion/review of JSA work or other non-permitted activities. | Graphics | All in attendance |
| **Endorse new permits & JSAs**<br>• Endorse new permits and JSA only work that do not have SIMOPS or concurrent work conflicts.<br>• Confirm that Life Saving Actions have been addressed in Work Plan.<br>• Consider whether the jobs can go ahead before endorsing the permits. Function Supervisors to support their endorsement discussing the LSA activity, safety and production impacts.<br>• Conduct spot checks of Permit Packs (for example, permit details, JSA quality, required SWP Checklists attached, required IC procedures attached, work site verifications of tool talk and wet ink signatures, etc.). Provide timely feedback and direction to improve performance. | PTW search | PIC |
| **Assessments:**<br>Assign PTW, ICC, JSA, and TD Assessments.<br>Conduct assessments on a cross section of jobs, have additional focus on infrequent or higher risk jobs. (For example, CSE, Hot and Critical Work.) | PTW search | PIC |
| **Long Term Isolations:**<br>Review Long Term Isolation (weekly). | ICC search | PIC |

**Attendees:** PIC, AA, AAF (EM and Contract), others as necessary (for example, SHES Permit Coordinators, PH for specific input on unique work).

DocuSign Envelope ID: DBC83A32-C98A-4963-9E1E-44593247DA33



# Permit Assessment – In-Field

| | | | |
|---|---|---|---|
| **Production Unit:** | | **Facility Name:** | |
| **Permit Number(s) Assessed:** | | **Permit Type(s):** | |
| **Permit Description:** | | | |
| **Assessment Team:** | | | |
| **Date:** | | | |

| **Planning** | | | | |
|---|---|---|---|---|
| **Questions** | | **Yes** | **No** | **N\A** |
| 1. | Was the correct type of permit selected for this job? | ❒ | ❒ | ❒ |
| 2. | Were work scope, description, and location correctly documented? | ❒ | ❒ | ❒ |
| 3. | Was the Permit Pack list complete (for example, ICC, SCC, and External References (JSA, SWP Checklists, Rescue Plan, Procedures, Drawings, SDS, other)? | ❒ | ❒ | ❒ |
| 4. | Was the ICC cross-referenced? | ❒ | ❒ | ❒ |
| 5. | Was permit cross-referencing done (live/live, live/not live, start/finish)? Recommended when other jobs are a pre-requisite or would conflict. | ❒ | ❒ | ❒ |
| 6. | Did the JSA accurately identify the Job Scope? | | | |
| 7. | Were all applicable phases of the job addressed in the JSA? (e.g. Preparation, Execution, Reinstatement, General Safety) | ❒ | ❒ | ❒ |
| 8. | Were specific **hazards identified** for each phase of the Job in the JSA? | ❒ | ❒ | ❒ |
| 9. | Were specific, **measurable controls** or barriers identified for each hazard in the JSA? | | | |
| 10. | Did the supervisor or designate sign or electronically review the "JSA Reviewer" section? | ❒ | ❒ | ❒ |
| 11. | Was the JSA available for review at the Daily Work Coordination Meeting? | ❒ | ❒ | ❒ |
| 12. | Was the job reviewed at the Daily Work Coordination Meeting? | ❒ | ❒ | ❒ |
| 13. | Was the Permit Pack reviewed for completeness/correctness by the AA/AAF? | ❒ | ❒ | ❒ |
| 14. | Were SIMOPS and interfaces considered at the Daily Work Coordination Meeting? | ❒ | ❒ | ❒ |
| 15. | If SIMOPS deviations were identified, were they approved at the right level? | ❒ | ❒ | ❒ |

DocuSign Envelope ID: DBC83A32-C98A-4963-9E1E-44593247DA33



## Permit Assessment, continued

| Job/Work Site Preparation | | | | |
|---|---|---|---|---|
| | **Questions** | **Yes** | **No** | **N\A** |
| 16. | Do the permit approvals meet with the PU WMS defined roles and responsibilities? | ❒ | ❒ | ❒ |
| 17. | If an atmospheric test is required, are the results satisfactory to allow work or entry to proceed? | ❒ | ❒ | ❒ |
| 18. | Were the atmospheric test results recorded on the worksite copy? | ❒ | ❒ | ❒ |
| 19. | Was the gas detector within valid calibration and bump tested? | ❒ | ❒ | ❒ |
| 20. | Were locks and tags applied to isolation points as identified in the isolation plan? | ❒ | ❒ | ❒ |
| 21. | Was a Functional lock and tag applied to the ICP by the Area Operator? | ❒ | ❒ | ❒ |
| 22. | Was a Functional lock and tag applied to the ICP by the Permit Holder? | ❒ | ❒ | ❒ |
| 23. | Was Zero Energy demonstrated to the Permit Holder? | ❒ | ❒ | ❒ |
| 24. | Did the Area Operator sign the PTW "Approval to Commence" section? | ❒ | ❒ | ❒ |
| 25. | Did the Permit Holder sign the PTW "Acceptance to Commence" section? | ❒ | ❒ | ❒ |
| 26. | Did the Job Leader sign the JSA “Work Site Verification” section? (wet ink) | ❒ | ❒ | ❒ |
| 27. | Was a Toolbox talk conducted with the work group to review the Permit Pack? | ❒ | ❒ | ❒ |
| 28. | Was the JSA reviewed at the toolbox talk? | ❒ | ❒ | ❒ |
| 29. | Did the work group sign the PTW "Work Team Declaration?" | ❒ | ❒ | ❒ |

| Execution | | | | |
|---|---|---|---|---|
| | **Questions** | **Yes** | **No** | **N\A** |
| 30. | Was each JSA control or barrier initialed by the designated person when implemented? | ❒ | ❒ | ❒ |
| 31. | Were the specific, measurable controls identified on the JSA **in place** when required for the work | ❒ | ❒ | ❒ |
| 32. | Was the specialized PPE identified on the JSA in use at the worksite? | ❒ | ❒ | ❒ |
| 33. | Where necessary, did the work crew update the JSA for real time hazards, changing conditions, and changes in work scope at the worksite? (“wet ink”) | ❒ | ❒ | ❒ |
| 34. | Was the Permit Pack available at the work site? | ❒ | ❒ | ❒ |
| 35. | Was safety equipment and emergency escape routes accessible and clear? | ❒ | ❒ | ❒ |
| 36. | If required, was a competent standby person or fire watch at location? | ❒ | ❒ | ❒ |
| 37. | Was the permit still current (not timed out) while people were working? | ❒ | ❒ | ❒ |
| 38. | If required, were Temporary Defeat approvals still current while work was underway? | ❒ | ❒ | ❒ |

DocuSign Envelope ID: DBC83A32-C98A-4963-9E1E-44593247DA33



## Permit Assessment, continued

| Closeout and Reinstatement | | | | |
|---|---|---|---|---|
| | **Questions** | **Yes** | **No** | **N\A** |
| 39. | If applicable, were handovers conducted correctly (permit signatures, zero energy demonstration and toolbox talk)? | ❒ | ❒ | ❒ |
| 40. | Was status of the job communicated to the Area Operator at shift and job end? | ❒ | ❒ | ❒ |
| 41. | Were all tools and equipment removed from the worksite and the area left clean and tidy? | ❒ | ❒ | ❒ |
| 42. | Were Permit Pack documents reviewed and upgraded as needed? | ❒ | ❒ | ❒ |
| 43. | Was the Permit Pack closed out correctly? | ❒ | ❒ | ❒ |

## Observations:

**Area Authority (AA/AAF)** _____

**Management Review (PIC)** _____

DocuSign Envelope ID: DBC83A32-C98A-4963-9E1E-44593247DA33



# Permit Assessment – Desktop

| | | | |
|---|---|---|---|
| **Production Unit:** | | **Facility Name:** | |
| **Permit Number(s) Assessed:** | | **Permit Type(s):** | |
| **Permit Description:** | | | |
| **Assessment Team:** | | | |
| **Date:** | | | |

| **Planning** | | | | |
|---|---|---|---|---|
| | **Questions** | **Yes** | **No** | **N\A** |
| 1. | Was the correct type of permit selected for this job? | ❒ | ❒ | ❒ |
| 2. | Were work scope, description, and location correctly documented? | ❒ | ❒ | ❒ |
| 3. | Was the Permit Pack list complete (for example, ICC, SCC, and External References (JSA, SWP Checklists, Rescue Plan, Procedures, Drawings, SDS, other)? | ❒ | ❒ | ❒ |
| 4. | Was the ICC cross-referenced? | ❒ | ❒ | ❒ |
| 5. | Was permit cross-referencing done (live/live, live/not live, start/finish)? Recommended when other jobs are a pre-requisite or would conflict. | ❒ | ❒ | ❒ |
| 6. | Did the JSA accurately identify the Job Scope? | | | |
| 7. | Were all applicable phases of the job addressed in the JSA? (e.g. Preparation, Execution, Reinstatement, General Safety) | ❒ | ❒ | ❒ |
| 8. | Were specific **hazards identified** for each phase of the Job in the JSA? | ❒ | ❒ | ❒ |
| 9. | Were specific, **measurable controls** or barriers identified for each hazard in the JSA? | | | |
| 10. | Did the supervisor or designate sign or electronically review the "JSA Reviewer" section? | ❒ | ❒ | ❒ |
| 11. | Was the Permit Pack reviewed for completeness/correctness by the AA/AAF? | ❒ | ❒ | ❒ |

DocuSign Envelope ID: DBC83A32-C98A-4963-9E1E-44593247DA33



## Permit Assessment, continued

| Job/Work Site Preparation | | | | |
|---|---|---|---|---|
| | **Questions** | **Yes** | **No** | **N\A** |
| 12. | Do the permit approvals meet with the PU WMS defined roles and responsibilities? | ❒ | ❒ | ❒ |
| 13. | If an atmospheric test is required, are the results satisfactory to allow work or entry to proceed? | ❒ | ❒ | ❒ |
| 14. | Were the atmospheric test results recorded on the worksite copy? | ❒ | ❒ | ❒ |
| 15. | Was the gas detector within valid calibration and bump tested? | ❒ | ❒ | ❒ |
| 16. | Did the Area Operator sign the PTW "Approval to Commence" section? | ❒ | ❒ | ❒ |
| 17. | Did the Permit Holder sign the PTW "Acceptance to Commence" section? | ❒ | ❒ | ❒ |
| 18. | Did the work group sign the PTW "Work Team Declaration?" | ❒ | ❒ | ❒ |

| Execution | | | | |
|---|---|---|---|---|
| | **Questions** | **Yes** | **No** | **N\A** |
| 19. | Where necessary, did the work crew update the JSA for real time hazards, changing conditions, and changes in work scope at the worksite? (“wet ink”) | | | |

| Closeout and Reinstatement | | | | |
|---|---|---|---|---|
| | **Questions** | **Yes** | **No** | **N\A** |
| 20. | Was the Permit Pack closed out correctly? | ❒ | ❒ | ❒ |

## Observations:

**Area Authority (AA/AAF)** _____

**Management Review (PIC)** _____

DocuSign Envelope ID: DBC83A32-C98A-4963-9E1E-44593247DA33



# Job Safety Analysis (JSA) Assessment – In-Field

**Production Unit:** _____ **Facility Name:** _____

**Permit Number(s) Assessed:** _____ **Permit Type(s):** _____

**Permit Description:** _____

**Assessment Team:** _____

**Date:** _____

| | Questions | Yes | No | N\A |
|---|---|---|---|---|
| 1. | Did the JSA accurately identify the Job Scope? | ❒ | ❒ | ❒ |
| 2. | Were all applicable phases of the job addressed in the JSA? (e.g. Preparation, Execution, Reinstatement, General Safety) | ❒ | ❒ | ❒ |
| 3. | Were specific **hazards identified** for each phase of the job? | ❒ | ❒ | ❒ |
| 4. | Were specific, **measureable controls** or barriers identified for each hazard? | ❒ | ❒ | ❒ |
| 5. | Were the specific, measureable **controls in place** when required for the work? | ❒ | ❒ | ❒ |
| 6. | Was the JSA reviewed at the toolbox talk? | ❒ | ❒ | ❒ |
| 7. | Was each JSA control or barrier initialed by the designated person when implemented? | ❒ | ❒ | ❒ |
| 8. | Where necessary, did the work crew update the JSA for real time hazards, changing conditions, and changes in work scope at the worksite? (wet ink) | ❒ | ❒ | ❒ |
| 9. | Was the identified specialized PPE in use at the worksite? | ❒ | ❒ | ❒ |
| 10. | Were the JSA and identified attachments available at the worksite? | ❒ | ❒ | ❒ |
| 11. | Did the supervisor or designate sign or electronically review the "JSA Reviewer" section? | ❒ | ❒ | ❒ |
| 12. | Did the Job Leader sign the JSA "Work Site Verification" section? (“wet ink”) | ❒ | ❒ | ❒ |
| 13. | Have all members of the work team signed the Work Team Declaration when required? | ❒ | ❒ | ❒ |

## Observations:

_____

_____

_____

**Area Authority (AA/AAF)** _____

**Management Review (PIC)** _____

DocuSign Envelope ID: DBC83A32-C98A-4963-9E1E-44593247DA33



# Job Safety Analysis (JSA) Assessment – Desktop

**Production Unit:** _____ **Facility Name:** _____

**Permit Number(s) Assessed:** _____ **Permit Type(s):** _____

**Permit Description:** _____

**Assessment Team:** _____

_____

**Date:** _____

| | Questions | Yes | No | N\A |
|---|---|---|---|---|
| 1. | Did the JSA accurately identify the Job Scope? | ❒ | ❒ | ❒ |
| 2. | Were all applicable phases of the job addressed in the JSA? (e.g. Preparation, Execution, Reinstatement, General Safety) | ❒ | ❒ | ❒ |
| 3. | Were specific **hazards identified** for each phase of the job? | ❒ | ❒ | ❒ |
| 4. | Were specific, **measureable controls** or barriers identified for each hazard? | ❒ | ❒ | ❒ |
| 5. | Where necessary, did the work crew update the JSA for real time hazards, changing conditions, and changes in work scope at the worksite? (wet ink) | ❒ | ❒ | ❒ |
| 6. | Did the supervisor or designate sign or electronically review the "JSA Reviewer" section? | ❒ | ❒ | ❒ |
| 7. | Did the Job Leader sign the JSA "Work Site Verification" section? (“wet ink”) | ❒ | ❒ | ❒ |
| 8. | Have all members of the work team signed the Work Team Declaration when required? | ❒ | ❒ | ❒ |

## Observations:

**Area Authority (AA/AAF)** _____

**Management Review (PIC)** _____

DocuSign Envelope ID: DBC83A32-C98A-4963-9E1E-44593247DA33



# Isolation Control Certificate (ICC) Assessment – In-Field

**Production Unit:** _____ **Facility Name:** _____

**Permit Number(s) Assessed:** _____ **Permit Type(s):** _____

**Permit Description:** _____

**Assessment Team:** _____

**Date:** _____

| | Questions | Yes | No | N\A |
|---|---|---|---|---|
| 1. | If a personal isolation was used, was it in compliance with the personal isolation guidance? | ❒ | ❒ | ❒ |
| 2. | Was the isolation plan verified by a second independent competent person? | ❒ | ❒ | ❒ |
| 3. | Were the ICC points clearly identified? | ❒ | ❒ | ❒ |
| 4. | Was the ICP number on the ICC correct? | ❒ | ❒ | ❒ |
| 5. | Were isolations verified in the field by a second independent competent person and documented on the field copy? (wet ink) | ❒ | ❒ | ❒ |
| 6. | Were the isolation points secured with a Lock and Tagged? | ❒ | ❒ | ❒ |
| 7. | Did the Area Operator apply a Functional Lock and Tag to the ICP? | ❒ | ❒ | ❒ |
| 8. | Did the Permit Holder apply a Functional Lock and Tag to the ICP? | ❒ | ❒ | ❒ |
| 9. | Were PH Functional locks attached to the ICP for each permit reliant on this ICC? | ❒ | ❒ | ❒ |
| 10. | Were PH Functional locks being controlled by the Permit Holder? | ❒ | ❒ | ❒ |
| 11. | Were Functional Locks returned to the allocated location on job completion? | ❒ | ❒ | ❒ |
| 12. | Was Positive Isolation implemented for vessel and tank entry? (Must be in place for Confined Space Entry or have an approved MOC.) | ❒ | ❒ | ❒ |
| 13. | If required, were blinds and spades clearly identified on P&IDs? | ❒ | ❒ | ❒ |
| 14. | If required, were blinds and spades line rated? | ❒ | ❒ | ❒ |
| 15. | Was de-isolation approved before being performed? | ❒ | ❒ | ❒ |
| 16. | If a Sanction To Test was conducted, were all linked permits suspended? | ❒ | ❒ | ❒ |
| 17. | Were Long Term Isolations identified and in the right state in the ePTWS? | ❒ | ❒ | ❒ |
| 18. | Were the Functional Locks registered and logged? | ❒ | ❒ | ❒ |
| 19. | Is a weekly review of the long term isolations (LTIs) status conducted? | ❒ | ❒ | ❒ |
| 20. | Is a quarterly field review of LTIs conducted to confirm the isolation integrity? | ❒ | ❒ | ❒ |

DocuSign Envelope ID: DBC83A32-C98A-4963-9E1E-44593247DA33



## Observations:

**Area Authority (AA/AAF)** _____

**Management Review (PIC)** _____

DocuSign Envelope ID: DBC83A32-C98A-4963-9E1E-44593247DA33



# Isolation Control Certificate (ICC) Assessment – Desktop

**Production Unit:** _____ **Facility Name:** _____

**Permit Number(s) Assessed:** _____ **Permit Type(s):** _____

**Permit Description:** _____

**Assessment Team:** _____

**Date:** _____

| | Questions | Yes | No | N\A |
|---|---|---|---|---|
| 1. | Was the isolation plan verified by a second independent competent person? | ❒ | ❒ | ❒ |
| 2. | Were the ICC points clearly identified? | ❒ | ❒ | ❒ |
| 3. | Were isolations verified in the field by a second independent competent person and documented on the field copy? (wet ink). | ❒ | ❒ | ❒ |
| 4. | If required, were blinds and spades clearly identified on P&IDs? | ❒ | ❒ | ❒ |
| 5. | Was de-isolation approved before being performed? | ❒ | ❒ | ❒ |
| 6. | Were Long Term Isolations identified and in the right state in the ePTWS? | ❒ | ❒ | ❒ |
| 7. | Is a weekly review of the long term isolations (LTIs) status conducted? | ❒ | ❒ | ❒ |
| 8. | Is a quarterly field review of LTIs conducted to confirm the isolation integrity? | ❒ | ❒ | ❒ |

## Observations:

**Area Authority (AA/AAF)** _____

**Management Review (PIC)** _____

DocuSign Envelope ID: DBC83A32-C98A-4963-9E1E-44593247DA33



# Temporary Defeat (SCC) Assessment – In-Field

**Production Unit:** _____ **Facility Name:** _____

**Permit Number(s) Assessed:** _____ **Permit Type(s):** _____

**Permit Description:** _____

**Assessment Team:** _____

**Date:** _____

| | Questions | Yes | No | N\A |
|---|---|---|---|---|
| 1. | Were mitigating controls identified using the THA and were they implemented? | ❒ | ❒ | ❒ |
| 2. | Was an Integrity Critical Procedure applicable and was it available? | ❒ | ❒ | ❒ |
| 3. | Did a critical operating parameter (COP) result from implementing this TD? | ❒ | ❒ | ❒ |
| 4. | Were the details and contols provided for all COPs identified on the TD? | ❒ | ❒ | ❒ |
| 5. | Was the correct approval obtained for the Temporary Defeat? (Higher approvals are required as the duration or number of devices to be bypassed increases.) | ❒ | ❒ | ❒ |
| 6. | Was the Temporary Defeat approval valid (not timed out)? | ❒ | ❒ | ❒ |
| 7. | Was the TD in place across shifts? If yes, did handover occur? | ❒ | ❒ | ❒ |
| 8. | If required, was a Risk Assessment conducted for this TD? (determined by the approver) | ❒ | ❒ | ❒ |
| 9. | Was the TD removed as soon as possible after the job was completed? | ❒ | ❒ | ❒ |
| 10. | Was re-instatement of the TD authorized by the Area Authority prior to removal? | ❒ | ❒ | ❒ |
| 11. | Was a Long Term TD necessary and was the correct level of approval obtained? | ❒ | ❒ | ❒ |

## Observations:

_____

_____

_____

_____

_____

**Area Authority (AA/AAF)** _____

**Management Review (PIC)** _____

DocuSign Envelope ID: DBC83A32-C98A-4963-9E1E-44593247DA33



# Temporary Defeat (SCC) Assessment – Desktop

**Production Unit:** _____ **Facility Name:** _____

**Permit Number(s) Assessed:** _____ **Permit Type(s):** _____

**Permit Description:** _____

**Assessment Team:** _____

**Date:** _____

| | Questions | Yes | No | N\A |
|---|---|---|---|---|
| 1. | Did a critical operating parameter (COP) result from implementing this TD? | ❒ | ❒ | ❒ |
| 2. | Were the details and controls provided for all COPs identified on the TD? | ❒ | ❒ | ❒ |
| 3. | Was the correct approval obtained for the Temporary Defeat? (Higher approvals are required as the duration or number of devices to be bypassed increases.) | ❒ | ❒ | ❒ |
| 4. | Was the Temporary Defeat approval valid (not timed out)? | ❒ | ❒ | ❒ |
| 5. | If required, was a Risk Assessment conducted for this TD? (determined by the approver) | ❒ | ❒ | ❒ |
| 6. | Was re-instatement of the TD authorized by the Area Authority prior to removal? | ❒ | ❒ | ❒ |
| 7. | Was a Long Term TD necessary and was the correct level of approval obtained? | ❒ | ❒ | ❒ |

## Observations:

**Area Authority (AA/AAF)** _____

**Management Review (PIC)** _____

DocuSign Envelope ID: DBC83A32-C98A-4963-9E1E-44593247DA33

ExxonMobil Production

# WORK MANAGEMENT SYSTEM ASSESSMENT

## ACTION TRACKING REGISTER

PRODUCTION Best Practices

| Production Unit: | | Facility Name: | |
|---|---|---|---|

| Section | Question No. | Observation | Proposed Remedial Action | Responsible Person | Due Date | Comments and Status (Open, Closed, Closeout Date) |
|---|---|---|---|---|---|---|
| | | | | | | |
| | | | | | | |
| | | | | | | |
| | | | | | | |
| | | | | | | |
| | | | | | | |
| | | | | | | |
| | | | | | | |
| | | | | | | |
| | | | | | | |
| | | | | | | |
| | | | | | | |
| | | | | | | |
| | | | | | | |
| | | | | | | |
| | | | | | | |
| | | | | | | |
| | | | | | | |
| | | | | | | |
| | | | | | | |
| | | | | | | |
| | | | | | | |
| | | | | | | |
| | | | | | | |
| | | | | | | |

DocuSign Envelope ID: DBC83A32-C98A-4963-9E1E-44593247DA33



LIFE SAVING ACTIONS

# WORK AUTHORIZATION

Only do work that is authorized and follow the Permit and JSA

- Clearly describe the work scope
- Do the pre-job safety planning
- Get the Permit authorized before work each shift
- Review the Permit Pack with the team at the worksite
- If the work scope changes, STOP.
  Update and re-authorize Permit before resuming

*For more information refer to WMS Section 3*

W M S Work Management System

# ENERGY ISOLATION

Lock, verify and demonstrate zero enegry

- Develop and verify an Isolation Plan for the job
- Allow only competent personnel to perform isolations
- Verify isolations and ensure equipment is in a Safe State – proceed only when zero energy has been demonstrated
- Confirm that all jobs are complete prior to reinstatement

***For more information refer to WMS Section 4***

W M S Work Management System

DocuSign Envelope ID: DBC83A32-C98A-4963-9E1E-44593247DA33



LIFE SAVING ACTIONS

# BREAKING CONTAINMENT

Manage ignition sources and exposure to hazardous substances

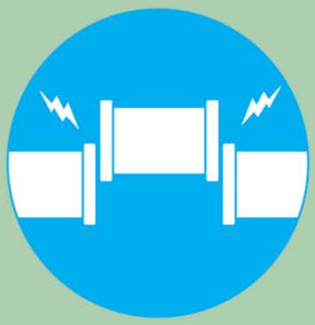

- Confirm break-points prior to commencing work
- Confirm Energy Isolation is complete
- Manage ignition sources
- Protect for exposure to toxic and hazardous substances – use correct PPE

*For more information refer to WMS Section 4*

W M S Work Management System

LIFE SAVING ACTIONS

# CRITICAL DEVICES

Bypass only when authorized – implement alternative controls

- Do not defeat or bypass a Critical Device without approval
- Document all defeated or bypassed Critical Devices
- Put alternative controls in place
- Communicate defeats and controls to affected personnel
- Reinstate Critical Devices Promptly

*For more information refer to WMS Section 4*

W M S Work Management System

DocuSign Envelope ID: DBC83A32-C98A-4963-9E1E-44593247DA33



LIFE SAVING ACTIONS

# HOT WORK

Remove flammable materials and gas test continuously

- Confirm Hot Work Barriers and controls
- Remove all flammable or combustible materials
- Gas test prior to starting work and continuously monitor atmosphere
- Competent Fire Watch is present with required equipment

*For more information refer to WMS Section 3.3*

W M S Work Management System

LIFE SAVING ACTIONS

# WORKING AT HEIGHT

Wear a harness with 100% tie-off and secure tools & materials

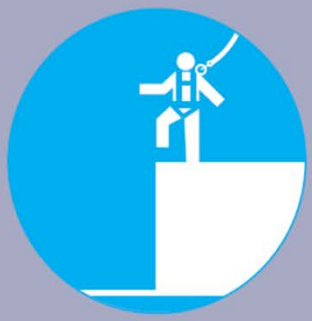

- Be competent in the use of fall protection
- Inspect all fall protection, work platforms, scaffolds, ladders, and tie-off points
- 100% tie-off while Working at Height
- Secure all tools and work materials
- Rescue Plan is in place and ready to execute

*For more information refer to WMS Section 3 and Working at Height Safe Work Practice*

W M S Work Management System

DocuSign Envelope ID: DBC83A32-C98A-4963-9E1E-44593247DA33



LIFE SAVING ACTIONS

# CONFINED SPACE ENTRY

Establish and maintain safe entry conditions

- Determine the Entry Class and apply required controls
- Develop an Atmospheric Monitoring Plan – continuously monitor during entry
- Assign competent CSE Attendant / Standby
- CSE Rescue Plan is in place and ready to execute

*For more information refer to WMS Section 3.4*

W M S Work Management System

LIFE SAVING ACTIONS

# LIFTING AND HOISTING

Use certified lifting gear and stay clear of suspended loads

- Use certified lifting equipment – inspect before use
- Document and approve Critical Lift Plans
- Assign competent personnel for lifting, rigging & signaling
- Control the lift area and pathway – stay clear of suspended loads

*For more information refer to WMS Section 3 and Crane and Lifting Gear Manual*

W M S Work Management System

DocuSign Envelope ID: DBC83A32-C98A-4963-9E1E-44593247DA33



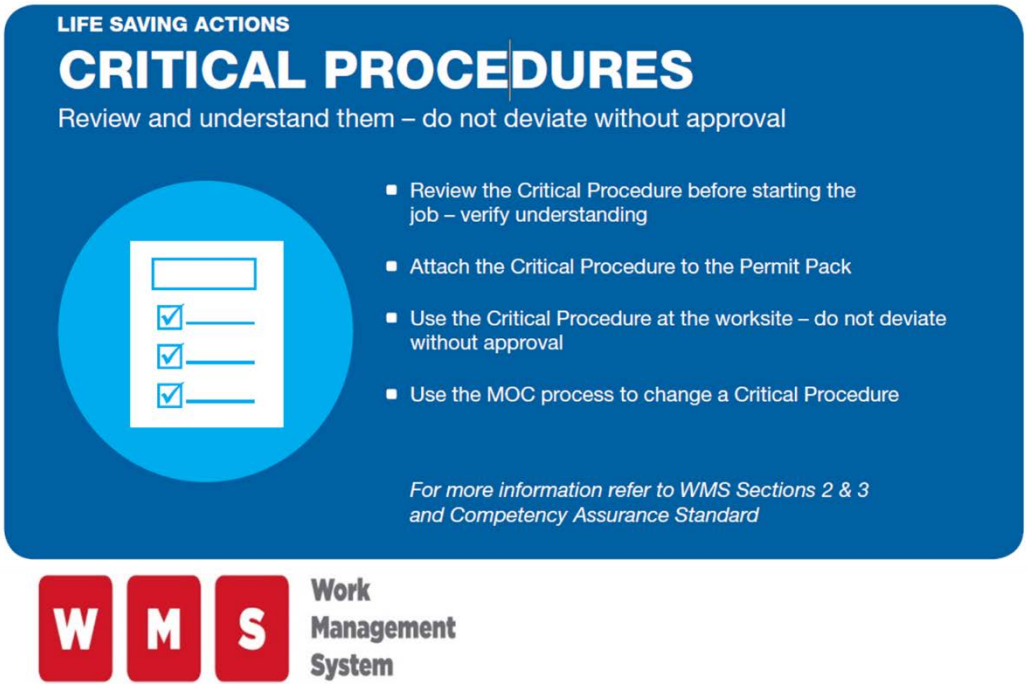

DocuSign Envelope ID: DBC83A32-C98A-4963-9E1E-44593247DA33



# 3.0 Permit to Work

## Overview

**Introduction** This section provides the process and responsibilities for the Permit to Work System (PTWS) used by the Company.

**In this chapter** This chapter contains the following information:


**3.1 Permit to Work Overview ..... 3-3**

3.1.1 PTWS Principles ..... 3-4
3.1.2 PTWS Requirements ..... 3-6
3.1.3 Criteria for Requiring a Permit ..... 3-10
3.1.4 Guidance for Work without a Permit ..... 3-11
3.1.5 Interface Management ..... 3-12

**3.2 Completing the Work Permit ..... 3-14**

**3.3 Hot Work ..... 3-22**

3.3.1 Hot Work Permit Considerations ..... 3-25
3.3.2 Hot Work Risk Management ..... 3-27
3.3.3 Control of Hot Work Health Hazards ..... 3-28
3.3.4 Hot Work Precautions ..... 3-30

**3.4 Confined Space Entry ..... 3-34**

3.4.1 Assessing Confined Space Entry Hazards ..... 3-36
3.4.2 Confined Space Entry Risk Management ..... 3-38
3.4.3 Confined Space Entry Precautions ..... 3-40

**3.5 Critical Work Permit ..... 3-48**

**3.6 General Work Permit ..... 3-54**

**3.7 Tools ..... 3-56**

3.7.1 Atmospheric Test Record ..... 3-56
3.7.2 Atmospheric Test Record (Supplement) ..... 3-56
3.7.3 Confined Space Entry Log-In/Log-Out Sheet ..... 3-56
3.7.4 Work Team Declaration (Supplement) ..... 3-56
3.7.5 Hot Work Permit ..... 3-56
3.7.6 Confined Space Entry Permit ..... 3-56
3.7.7 Critical Work Permit ..... 3-56
3.7.8 General Work Permit ..... 3-56

**3.8 SWP Checklists ..... 3-56**

3.8.1 Breaking Containment SWP Checklist ..... 3-56
3.8.2 Critical Lift SWP Checklist ..... 3-56

DocuSign Envelope ID: DBC83A32-C98A-4963-9E1E-44593247DA33



3.8.3 Working at Height SWP Checklist ..... 3-56
3.8.4 Diving Operations SWP Checklist ..... 3-56
3.8.5 Excavation and Ground Disturbance SWP Checklist ..... 3-56
3.8.6 High Risk Electrical Work SWP Checklist ..... 3-56
3.8.7 Abrasive Blasting SWP Checklist ..... 3-56
3.8.8 Hot Work SWP Checklist ..... 3-56
3.8.9 Confined Space Entry SWP Checklist ..... 3-56

**Figure 3-1** Permit Process Flow ..... **3-15**

**Table 3-1** Work Permit Process Details ..... **3-16**
**Table 3-2** Potential Hydrocarbon Sources ..... **3-23**
**Table 3-3** Hot Work Barrier Requirements ..... **3-24**
**Table 3-4** Confined Space Entry Class Determination ..... **3-37**
**Table 3-5** Critical Work Permit Activities ..... **3-49**

DocuSign Envelope ID: DBC83A32-C98A-4963-9E1E-44593247DA33



# 3.1 Permit to Work Overview

**Purpose and scope**

The purpose of Permit to Work System (PTWS) is to accomplish the following:

- Control the work activities and functional interfaces on Company facilities in order to prevent incidents resulting from uncontrolled work.
- Communicate information clearly to avoid an inadequate understanding of work task hazards.
- Gain necessary approvals and authorizations to execute work.
- Manage and control:
  - Risks relating to individual operations and work tasks
  - The process relating to the safety of individuals and facilities

The PTWS addresses the following work activities:

- Hot work
- Confined space entry
- General work
- Critical work
- Energy isolation
- Temporary defeats of critical devices

**Goals and objectives**

Specific goals of PTWS are to accomplish the following:

- Eliminate near misses and incidents associated with work on Company facilities.
- Consistently identify appropriate safeguards and safety precautions prior to and during work on Company facilities.
- Coordinate and approve work activities requiring work permits.
- Control the condition of the work site prior to beginning permitted work.
- Control the commencement and completion of permitted work.
- Maintain safety of the work site, operable systems, and personnel during work on Company facilities.

The PTWS goals are supported by the following:

- Clearly describe and document the work to be carried out and the time when it can be done.
- Assign authority and accountability for all aspects of the work.
- Provide written confirmation of the steps already taken to confirm that the work site is prepared and made safe before work commences.
- Describe outstanding hazards and controls.
- Clearly indicate the authorities who issue and receive the permit.
- Confirm that the facilities and equipment are formally handed back to the operating function in a safe condition for reinstatement.

DocuSign Envelope ID: DBC83A32-C98A-4963-9E1E-44593247DA33



## 3.1.1 PTWS Principles

**Introduction**

Several independent parties may be involved in controlling, coordinating, and managing activities.

The following parties work together during the planning and execution phases of work:

- **Operations** is responsible for the care, custody, and control of the equipment and facilities.
- The **Work Team** performs the work on the equipment and facilities.
- **Site Management** has oversight responsibility for PTWS to confirm that it is properly executed to confirm safe and effective work.

**Operations**

Operations are the owner of the facilities and has the expertise and skills to operate Company facilities. Operations have the following duties and expectations:

- Maintain monitoring and control of the operable systems and areas.
- Manage all required energy isolations.
- Safely prepare equipment and surrounding area prior to work commencement.
- Reinstate systems and isolations after completion of work.
- Maintain control of interfacing activities related to the operable systems and areas.

**Work Team**

The Work Team may be a single worker or a group of workers. In either case, the person responsible for safely performing the work is the Permit Holder (PH). This person **must** confirm that personnel in the team possess the correct expertise and skills for performing the work activity. The Work Team:

- Has the expertise and skills for the specific work to be performed.
- Performs required safeguards related to the work activity.
- Confirms that work preparations and appropriate materials, tools, and equipment are in place.
- Confirms that the work site is safe in cooperation with the Area Operator (AO).
- Confirms that the work is executed according to the requirements of the Permit Pack.
- Recognize any changes in work scope that require work to STOP and changes to be addressed. If the work scope changes, the permit will be suspended and the job discussed with the Area Authority who will determine whether any changes are required to the Permit Pack e.g. new permit, revised JSA or a new SWP Checklist.

*Continued*

DocuSign Envelope ID: DBC83A32-C98A-4963-9E1E-44593247DA33



## PTWS Principles, Continued

**Site management**

Site Management is responsible for overseeing the execution of PTWS and has the following duties and expectations:

- Coordinates and supervises work on Company facilities.
- Reviews the proposed work activity to confirm that potential interfaces are identified and appropriately managed.
- Review of work permits for completeness of job and safety planning efforts and endorsement of work permits as appropriate.
- Assesses and stewards the effectiveness of PTWS in controlling work and in achieving the goal of safe and efficient work on Company facilities.

**Remote Field Operations (RFO) scalability**

It is recognized that work is also performed at remote field locations where a single person (or a limited number of personnel) are responsible for the safe execution of work.

In these cases, it is the expectation that a Production Unit (PU) identify what work can be performed by a single person in these locations. Consideration should be given to critical activities and the segregation of responsibilities to ensure that adequate safeguards are in place and work execution is managed.

Where a person in a remote location either:

- Identifies additional work not already approved ("break-in").
- If the scope of the permitted work that was approved changes.
- The individual **must** notify the Person in Charge (PIC) to gain approval to proceed and document this conversation and approval on the permit form.

Where a single person in remote locations is performing work, that person **must** be deemed competent by the PU to perform duties and fulfill the requirements of the Work Management System (WMS). In these cases, the individual will be the Permit Holder (PH) and may fulfill the requirements of both the Area Authority (AA) and Area Operator (AO) and sign the appropriate sections.

In cases where these persons execute work requiring a permit, each step of the permit process **must** be followed to ensure that work is planned, hazards assessed, controls established (including isolations and temporary defeats), work site safety checks are performed,( including zero energy confirmation and demonstration to other personnel assisting) work is safely executed, and equipment and systems safely reinstated.

JSA supervisor signature for RFO JSA's that are prepared in the field will be a designated person (when the supervisor is not present). The Task Leader (PH) may sign both the Supervisor and Task Leader sections of the JSA.

Permits continuing the next day/shift, verbal notification to the AO who suspends the permit. The next day/shift the AA will *Authorize* the permit, an AO will *Issue* the permit and *Accept* the permit for the PH who is in the field. The AO will then notify the PH that the permit has been electronically accepted on their behalf, they can then sign the permit at the remote site and commence work.

DocuSign Envelope ID: DBC83A32-C98A-4963-9E1E-44593247DA33



## 3.1.2 PTWS Requirements

**Introduction**

PTWS supports the Work Management System by:

- Requiring planning and preparation
- Requiring pre-job checks
- Approving the work activity
- Maintaining control during the work permitting process
- Requiring closeout checks

**Basics for using a work permit**

Using a work permit typically involves the following:

- Only WMS trained individuals are allowed to perform permitted work. The training required depends on their roles and responsibilities.

  An individual can be exempted from the training by the Operations or Maintenance Superintendent for short duration specialist jobs because of their specialized expertise required at short notice. However, a dedicated WMS trained Permit Holder will be in attendance.
- With the exception of breakdown or break-in type work, a work permit is typically progressed to the *Endorsed* stage the day before the work is planned so that it can be properly reviewed at the Daily Work Coordination Meeting.
- A work order is normally the basis for a work permit, and the work description on the work permit should be consistent with the work order job description. When the work requirement is initiated by other than a work order (for example, a Construction Work Pack or WellWork Procedure), the work description on the work permit should be consistent with the description on the initiating document.
- The type of work permit cannot be changed e.g. a General Work Permit cannot be used as a Hot Work Permit.
- If the work scope or conditions of the permit change during the term of the permit the work **must** stop and the work permit suspended. The Operations AA will determine whether a new permit will be required or whether the changes should be reflected in the appropriate documents of the Permit Pack (e.g. JSA) and communicated to affected personnel. If the changes are not adequately controlled or mitigated, a new permit **must** be developed.
- All work permits have a unique number that can be used as a reference number on all associated documentation required for the work to be performed.
- The permit is not valid if not completed correctly with the required endorsements, approvals, and signatures.
- The Central Control Point (CCP) is the dedicated location where the work permit is controlled.
- The permit is not considered "Live" until it is signed by the Area Operator and Permit Holder.
- The paper copy of the Permit Pack in the field is the controlled copy, this includes all updates and required signatures. Minor changes to the Permit Pack documents can be made “wet ink” in the field.

*Continued*

DocuSign Envelope ID: DBC83A32-C98A-4963-9E1E-44593247DA33



## PTWS Requirements, Continued

**Planning and preparation**

Planning and preparation activities include identifying tasks, reviewing, and specifying the following:

- Type of work, location, and conditions to be managed with work permits.
- Type of work permit required for each job, based on the risks involved.
- Description of the work based on a work order (or equivalent).
- Detailed and specific precautions and preparations required to protect the following from potential hazards:
  - Personnel
  - Environment
  - Equipment
  - Materials

**Pre-job checks**

The work permit process contains pre-job checks so that:

- The work site is safe.
- The necessary defeats or energy isolations are performed, verified, and demonstrated.
- The necessary and appropriate atmospheric testing is performed.
- The work does not unsafely interfere with other work planned or in progress.
- Those affected by the work are informed of the work and of its possible effects on their work.
- Appropriate communication and coordination meetings are held, and key decisions are documented.

**Work permit approvals**

The work permit approval is typically performed in two stages:

- **Work Planning:** Daily Work Coordination Meetings (DWCMs) should be attended by the key Work Management stakeholders, specifically, the PIC, AA, and functional supervisors. The objective of the meeting is to review and coordinate interfacing activities and manage the risks involved with concurrent activities and simultaneous operations (SIMOPS) by evaluating the proposed jobs prior to endorsement. New and suspended permits are reviewed. Non-permitted work that could conflict with planned activities are also discussed at this meeting.

  *Endorsement* at this stage grants permission to progress the permit and proceed with the work activities as planned.

  **Reference:** Section 2, "Tools," for a recommended Daily Work Coordination Meeting agenda.

- **Work Execution:** Operations (Area Operator, Area Authority) confirms that prerequisites for the work specified on the work permit are in place. The Permit Pack is then *Authorized* and *Issued*.

*Continued*

DocuSign Envelope ID: DBC83A32-C98A-4963-9E1E-44593247DA33



## PTWS Requirements, Continued

**Valid period of work permits**

A work permit is valid only under the following conditions:

- Permits are valid for the duration of the work or until the end of shift (whichever comes first) up to a maximum of 16 hours with an extension.

  ! **IMPORTANT:** Extended permits typically remain *Live* during a shift change if the PH does not change. However, it is expected that the incoming AA and AO review the Permit Pack and countersign it in the electronic Permit to Work System (ePTWS). The AO **must** also visit the work site and sign the field copy of the permit.

  When the PH changes out during the shift, the oncoming PH signs the field copy permit after reviewing the Permit Pack, confirming the isolation control point (ICP) functional lock is in place, and signs the permit. The AO **must** demonstrate zero energy when required.

  Note: The AO will be notified whenever the PH changes out.

- A work permit may be issued for up to seven days but the permit **must** be progressed through the system each shift as normal (Authorized by the AA, Issued by the AO and Accepted by the PH). The permit will be signed each shift by the AO and PH after conducting all necessary verification and demonstration of zero energy.
- Controls verifications and safety checks **must** be performed by the oncoming work team before work starts. Toolbox talks are required at each shift change and when new personnel join the Work Team. New personnel will sign the permit in the Work Team Declaration section once they have been briefed and understand the content of the Permit Pack.
- The scope of work does not change from the job description on the permit.
- A new permit **must** be developed after a maximum of seven days for the longer term work.
- Work should typically start within one hour of the permit going *live* at the work site (AO and PH signatures).
- Work **must** stop before the permit expires each shift unless an extension is requested and approved.

**Control of work**

Operations personnel are responsible for the operational systems and area(s). They **must** provide control of work commencement, suspension, and recommencement.

*Continued*

DocuSign Envelope ID: DBC83A32-C98A-4963-9E1E-44593247DA33



## PTWS Requirements, Continued

**Suspension and withdrawal**

A work permit can be suspended or withdrawn in the following situations:

- If anyone is seen working in noncompliance or an unsafe manner.
- Urgent conflicting work develops.
- Work scope changes that does not align with the permit conditions and controls.
- If the work will continue on the following shift or day.
- An emergency occurs or an emergency alarm sounds.

! **IMPORTANT:** In an emergency situation or if an emergency alarm sounds, all work **STOPS**. Once the emergency is controlled, the PIC (or designate) **must** assess the situation, and determine any permits that will be suspended or whether it is safe to approve work to resume. Pre-work safety checks by the PH and Work Teams are required before work is recommenced.

**Closeout checks**

Permit closeout checks confirm that:

- Work was completed or suspended satisfactorily.
- Isolations and Temporary Defeats are returned to service and assessed.
- Equipment is returned to a safe condition and the work site is tidy.
- Completion of the work is communicated to the affected personnel.

DocuSign Envelope ID: DBC83A32-C98A-4963-9E1E-44593247DA33



## 3.1.3 Criteria for Requiring a Permit

**Introduction**

Work permits are required to manage activities by planning, evaluation, interface coordination, preparation, controls, communication, approval, handover, and feedback.

**Work that requires a permit**

This section includes a description of each permit type and provides examples of work activities that fall into each type category. The examples provided are based on typical Production Unit work activities but may not be exhaustive to the types of work being performed at a facility.

- General Work
- Hot Work
- Confined Space Entry
- Critical Work

Examples of work activities that fall into each category of permit can be found in:

- Section 3.3, "Hot work permit activities"
- Section 3.4, "Confined space examples"
- Section 3.5, "Critical work permit activities"
- Section 3.6, "General work permit activities"

! **IMPORTANT:** Each Production Unit should assess work activities at their facilities to determine work permit requirements for those activities not listed above.

DocuSign Envelope ID: DBC83A32-C98A-4963-9E1E-44593247DA33



## 3.1.4 Guidance for Work without a Permit

**Overview**

Some activities included in the permit categories may be considered lower risk and not requiring a permit by the Production Unit. A JSA will be required for many of these activities.

> ! **IMPORTANT:** For these non-permitted activities, controls **must** be identified to manage any hazards.
>
> These activities **must** be assessed and mitigating controls documented using an appropriate Risk Assessment method selected by the Risk Screener and approved by the OIMS 6-4 Owner.

The following are examples of activities/criteria that could be considered by the PU:

- Immediate action required in order to maintain safety or the facility's integrity (emergency). Work should be approved by the Person in Charge if the situation allows.
- Routine operations (for example, production or marine) covered by approved procedures.
- General work inside workshops or in the living quarters.
- Visual inspections.
- Cleaning and housekeeping.
- Sampling from an engineered (purposely designed) sample point.

**Maintenance work not requiring a permit**

Examples of maintenance activities that could be considered by the PU as work not requiring a permit:

- Checking and refilling lube oil levels
- Checking for leakages
- Visual inspections and monitoring of pressure or temperatures
- General maintenance and repair work in workshops that do not involve critical work activities or confined space entry

**Operations work not requiring a permit**

Examples of operations activities that could be considered by the PU as work not requiring a permit:

- Operation (i.e. start, stop, operate) production/processing facilities (for example, wells, process equipment, utility systems, bilge and ballast systems) that are managed by procedures.
- Surveillance and checking of production/processing facilities.
- Routine operator activities (for example, equipment preparation for maintenance or construction, returning equipment to service, and housekeeping).
- Helicopter operations (landing, takeoff, and re-fueling).
- Loading or unloading containers from supply boats (refer to *critical lift* definition).

DocuSign Envelope ID: DBC83A32-C98A-4963-9E1E-44593247DA33



## 3.1.5 Interface Management

**Introduction**

Many work permits require managing interfaces between facilities, groups or individuals in order for the work to be executed safely. This section describes the types of interfaces that need to be effectively managed, as follows:

- Organizational interfaces
- Shift or crew interfaces and handover
- Physical interfaces

**Organizational interfaces**

Organizational interfaces occur when more than one company or organization can be affected by a work activity. Examples include drilling, diving and construction activities.

The management of organizational interfaces can be accomplished by requiring work permits to be countersigned by the designated Area Interface Authority (AIA).

For potential interface issues, refer to the SIMOPS Matrix and Restriction Tables to identify and address them.

**Reference:** Section 6.1.3, "SIMOPS Matrix"

**Shift or crew interfaces and handover**

Work or activities that cross shifts or crews require that work status and precautions are communicated and managed. Handover **must** be managed in a controlled manner with appropriate documentation to support the transition.

Handover information **must** be documented by key personnel for their counterpart:

- PIC
- Area Authorities
- Functional Supervisors
- Operators

Note: Sources of handover information may vary to include things such as work permits, certificates, procedures, incident reports, and checklists. Handover logs and notes must be maintained.

This section complements existing PU handover practices to ensure that all aspects of the WMS are covered during shift and crew changes. Key personnel should ensure that all relevant information is discussed with oncoming personnel.

The following information **must** be included as part of the handover process:

- Incidents
- Live and suspended work permits
- Closed permits

*Continued*

DocuSign Envelope ID: DBC83A32-C98A-4963-9E1E-44593247DA33



## Interface Management, Continued

**Shift or crew interfaces and handover**, continued

- Open and closed isolations (short- and long-term isolations)
- Temporary Defeats
- Equipment status and readiness
- New critical operating parameters (COPs) introduced
- Lock-out/tag-out (LOTO) and energy isolations requires that isolation keys are exchanged at crew or shift changes through a custody transfer process
- Planned work activities
- Car Seal Register changes

Work site controls **must** be re-verified prior to work commencing each shift or at each AO or PH change out.

**Physical interfaces**

Work or activities can cross physical areas or locations. Examples are:

- Cutting into a deck or firewall on an offshore platform can cause sparks in the adjacent area.
- Pressure testing pipework can extend beyond the area where the pressure is being applied.
- Pigging a pipeline or flowline between two locations requires coordinated activities at both locations.
- Work on communications systems between locations can affect automatic shutdown functions on the location.

The management of physical interfaces can be accomplished in several ways:

- Interfaces can be managed by:
  - Identifying *secondary task areas* associated with the permit.
  - Requiring work permits to be countersigned by additional users, for example, the AIA. .
  - Preparing a separate work permit for the *affected site* and cross-referencing it to the work permit at the *controlling site*.

The Daily Work Coordination Meeting should identify physical interfaces and confirm that the work permit requirements appropriately reflect them.

> **Reference:** Section 2, "Tools," for a recommended Daily Work Coordination Meeting agenda

DocuSign Envelope ID: DBC83A32-C98A-4963-9E1E-44593247DA33



## 3.2 Completing the Work Permit

**Introduction**

This section provides details of the steps in preparing and completing a permit. This section also describes the process flow in developing the Permit Pack with the defined responsibilities for each step of the process. This section closely ties with the Work Management process described in Section 2, "Work Management System."

*Continued*

DocuSign Envelope ID: DBC83A32-C98A-4963-9E1E-44593247DA33



## Completing the Work Permit, Continued

**Flowchart** The following flowchart summarizes the Work Management process referenced during the work permitting process.

Figure 3-1 Permit Process Flow

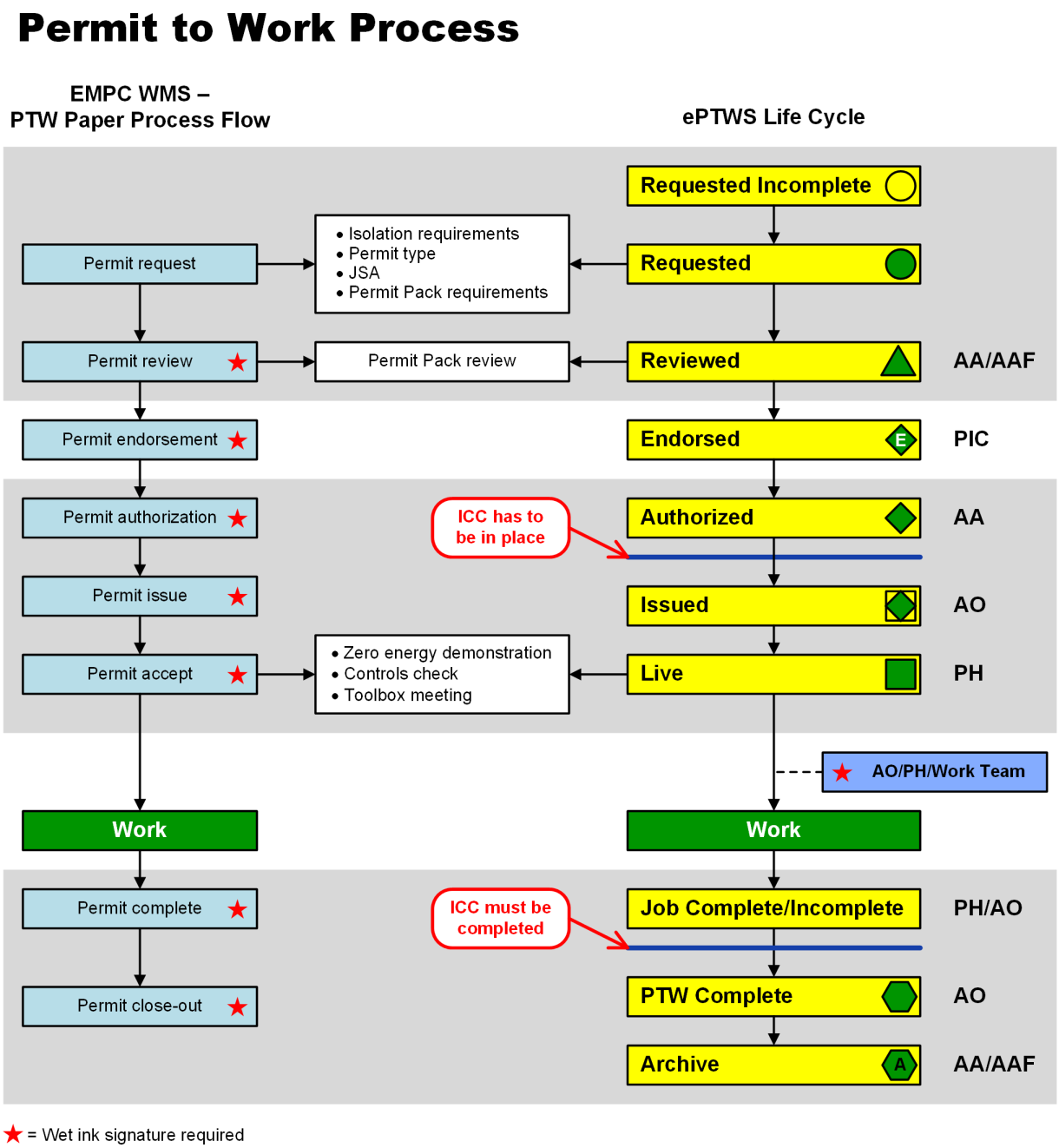


*Continued*

DocuSign Envelope ID: DBC83A32-C98A-4963-9E1E-44593247DA33



## Completing the Work Permit, Continued

**Work permitting process**

The following table details each of the Work Permit Process flow phases, typical steps required at each of the phases, reference to the applicable sections of the permit(s), and the responsible person(s) required to execute the requirements at the specific phase.

Table 3-1 Work Permit Process Details

| Task | Activity | Responsible Person |
|---|---|---|
| PTW Request | 1. Obtain work order, assigned work, or work request from Site Management representative.<br>2. Determine permit type or types required (General, Hot, Confined Space Entry or Critical).<br>3. Complete the required fields on the permit, include:<br>▪ Date of work.<br>▪ Time of proposed work.<br>▪ Specific location of work.<br>▪ Equipment/system tag or ID number.<br>▪ Work order number (if applicable).<br>▪ Permit Holder and company name assigned to the job.<br>▪ Provide details in the Work/Task Description. Ensure alignment with the work order or work assignment detail. Ensure that the work scope and details are clear and sufficient to communicate to any person the location, activities, and equipment required to complete the job.<br>▪ The permit requestor selects the isolation type required (none, personal or Isolation Control Certificate [ICC]/ Remote Field Isolation Certificate [RFIC]) and indicates the need for a Temporary Defeat (TD) in the Permit Pack Document (PPD) Other. | Permit Requestor (PH, Planner, Supervisor or other person) |

*Continued*

DocuSign Envelope ID: DBC83A32-C98A-4963-9E1E-44593247DA33



## Completing the Work Permit, Continued

**Work permitting process**, continued

| Task | Activity | Responsible Person |
|---|---|---|
| Permit Preparation | 1. The requestor or PH visits the worksite to assess potential hazards associated with the planned work using the Task Hazard Assessment (THA) tool. When using a copied permit, the THA **must** be reviewed to confirm that the identified hazards are current and applicable for the planned activity. | Permit Requestor |
| | 2. The Permit Holder then initiates the Job Safety Analysis (JSA). A Reference JSA can be used but it **must** accurately address the job scope. The PH engages the Work Team and other relevant functional group representatives in the JSA development, review and updating. | |
| | 3. The PH reviews the Permit Pack Requirements Matrix to identify all required Permit Pack Documents (PPDs). This Matrix indicates documents that are mandatory or to be reviewed and considered for the type of work. However, based on the THA and JSA, the PH can identify additional external reference documents (Safe Work Practice Checklists, Integrity Critical Procedures (or Integrity Critical Procedure Checklist), Material Safety Data Sheets [SDSs], and others) that are also required to ensure the job progresses safely. The Permit Document requirements are documented in the Permit Section and attached/linked with Permit for Review and use during work execution. | Permit Holder (PH) |
| Permit Review | 1. The Permit Holder (PH) reviews the Permit Pack with the Area Authority (AA). The AA for the Permit Pack review can be the functional supervisor (or lead) Area Authority Functional (AAF) who has the knowledge and understanding of the proposed job. | PH and AA/AAF |
| | 2. The AA/AAF, in consultation with the PH, reviews the Permit Pack to ensure all hazards and controls are identified and Permit Pack required documents are correct. If isolations or temporary defeats are required, the AAF consults the AA (Operations) to verify that all isolation and TD requirements are accurate before progressing the permit to *Reviewed*. | PH and AA/AAF |
| | 3. The AA/AAF signs the JSA Reviewer section of the JSA (if not already signed by the designated person). | AA/AAF |

*Continued*

DocuSign Envelope ID: DBC83A32-C98A-4963-9E1E-44593247DA33



## Completing the Work Permit, Continued

**Work permitting process**, continued

| Task | Activity | Responsible Person |
|---|---|---|
| Permit Endorsement | a) After review by the AA/AAF and PH, the Permit is endorsed by the PIC at the Daily Work Coordination Meeting (DWCM).<br>A comprehensive check for any SIMOPS or conflicting work issues will be conducted before the permit is moved to the *Endorsed* state.<br>In some cases, the PIC may verbally endorse break-in permits for Remote Field Operations (RFOs) allowing the work to progress. | Person in Charge (PIC) |
| | b) Necessary isolations and/or TDs will be discussed at the DWCM.<br>It is the responsibility of the Operations AA to assign duties in performing Isolations and Temporary Defeats. | AA |
| | c) The Isolating Authority (IA) develops the isolation and TD plans and submits it to the Operations AA for verification.<br>The IA in consultation with the Area Operator (AO) and Control Room Operator, as required, performs the isolations and defeats when required.<br>Isolation Certificate and Temporary Defeat Certificates **must** be linked (cross-referenced) to the permit(s). | IA |
| Authorization | On the day the permit is required, the AA (Operations) who is responsible for managing the permitted activities *Authorizes* the permit if there are no conflicting activities. | AA |

*Continued*

DocuSign Envelope ID: DBC83A32-C98A-4963-9E1E-44593247DA33



## Completing the Work Permit, Continued

**Work permitting process**, continued

| Task | Activity | Responsible Person |
|---|---|---|
| Work site Verification/ Permit Issue | Work site verifications **must** occur before the final permit wet ink signatures by the AO and PH and commencement of work.<br><br>The AO **must** familiarize themselves with the work scope, and confirm that the required Isolations or TDs are in place, the AO verifies the isolation integrity and demonstrates zero energy. The AO verifies that prerequisite controls identified in the Permit Pack are put in place and then signs the permit. JSA controls and SWP Checklist items have been confirmed up to the point prior to work execution.<br><br>This also includes any atmospheric (gas) tests required for the job. The AO **must** ensure that atmospheric testing is conducted by an Authorized Gas Tester (AGT). Initial test(s) results **must** be recorded on the Atmospheric Test Record.<br>**Reference:** Section 3, "Tools," for an Atmospheric Test Record for situations where work is conducted without a permit or when additional space is required. | AO |
| Permit Acceptance | Once the Permit is signed by the AO, the PH **must** conduct the toolbox meeting with the Work Team before each member signs the Work Team Declaration Section of the permit.<br>The PH and Work Team **must** verify that each control identified in the Permit Pack is in place at the time it is required.<br>The PH signs the permit and the permit goes Live at this point.<br>**Work can commence!** | PH and Work Team |

*Continued*

DocuSign Envelope ID: DBC83A32-C98A-4963-9E1E-44593247DA33



## Completing the Work Permit, Continued

**Work permitting process**, continued

| Task | Activity | Responsible Person |
|---|---|---|
| Work execution | 1. All personnel involved with the job are to make sure that all required controls from the Permit, JSAs, and SWP Checklist and Integrity Critical Procedures (or Integrity Critical Procedure Checklist) are in place when required.<br>The team members **must** perform a last minute Risk Assessment (LMRA) before, during and after the job. | PH and Work Team |
| | 2. Shift Requirements:<br>The AO and PH sign the permit each shift after all required demonstration and verification has taken place.<br>Any new work team members will sign the "Work Team Declaration". | AO, PH and Work Team |
| | 3. Permit Extension:<br>Should there be a need to extend the duration of the permit to work beyond the shift to complete the job or activity. The PH requests the extension and a same shift extension can be approved by agreement between the PH, AO, and AA to a maximum of 16 hours total from the start of the shift.<br>The AA can approve the extension for up to 4 hours after shift change provided the work is being completed by the same crew. The AO **must** be notified when this occurs.<br>The extension can only be processed in the last hour of the shift in the electronic system.<br>The work can continue through the Operations shift changes; however, the incoming AO **must** visit the work site and sign the paper copy of the permit, then both incoming AO and AA countersign the permit in the electronic system, providing the reason for the countersignature. | AA, AO and PH<br><br>AA and AO |
| | PH or Work Team Change out:<br>When the PH changes out during the shift, the oncoming PH signs the field copy permit after reviewing the Permit Pack, confirming the isolation control point (ICP) functional lock is in place, and signs the permit. The AO **must** demonstrate zero energy when required.<br>Note: The AO will be notified when the PH changes out.<br>When the Work Team changes out the PH **must** review the Permit Pack, confirm controls are in place and conduct a toolbox meeting with the Work Team prior to the Work Team signing the "Work Team Declaration." | PH and Work Team |

*Continued*

DocuSign Envelope ID: DBC83A32-C98A-4963-9E1E-44593247DA33



## Completing the Work Permit, Continued

**Work permitting process**, continued

| Task | Activity | Responsible Person |
|---|---|---|
| Permit Close-out | 1. When the work has been completed or when the work has stopped under the conditions and duration of the permit, the permit **must** be closed out. | PH |
| | 2. The PH is responsible for accounting for all personnel involved in the work, and the work site is restored to a safe and tidy condition. The PH is also responsible for communicating if the job has been completed or, if not, the status of the work. | |
| | 3. Once the PH completes the job, the PH notifies the AO and returns the work site copy of the Permit Pack to the agreed location or person. The PH confirms *Job Complete*. | PH and AO |
| | 4. For work that involves isolations or TDs, the AO confirms that the job is complete, and then notifies the AA of the job status. | |
| | 5. The AA authorizes the controls to be removed if there are no other permits linked to the ICC or TDs. | |
| | 6. Once the isolations or TDs (or both) are removed and the work site inspected, the AO progresses the permit to *PTW Complete*. | |

DocuSign Envelope ID: DBC83A32-C98A-4963-9E1E-44593247DA33



# 3.3 Hot Work

**Introduction**

This section discusses hot work activities and the precautions to be taken while performing hot work. These precautions are intended to protect personnel and equipment when performing hot work. This section also discusses the responsibilities for implementing protective measures during hot work.

Applicable Integrity Critical Procedures (or Integrity Critical Procedure Checklist), welding or hot tapping procedures and applicable safe work practices checklists **must** be part of the Permit Pack. PU procedures and safe work practices should align with the *Upstream Safety Manual*.

**Reference:** Section 3, "Tools," for SWP Checklists

**Hot Work Permit activities**

The Hot Work Permit is red in color and covers any open flame or spark-throwing operations.

**Reference:** Section 3, "Tools," for the Hot Work Permit

Work involving non spark-throwing activities is covered by the Critical Work Permit category of "Spark Potential."

Examples of open flame or spark-throwing work activities requiring a Hot Work Permit include the following activities:

- Open flame
- Welding, burning, brazing, and grinding
- Use of a de-burring tool
- CADWELD® welding
- Stress relieving equipment that could develop a surface temperature higher than 400°F (200°C)
- Cutting and gouging
- Propane heating equipment
- Any activity that could generate sparks or slag that could be thrown out from the point of work

*Continued*

DocuSign Envelope ID: DBC83A32-C98A-4963-9E1E-44593247DA33



## Hot Work, Continued

**Potential hydrocarbon sources**

The following are examples of potential hydrocarbon sources that should be considered for hot work location, distance, and barrier requirements:

Table 3-2 Potential Hydrocarbon Sources

| Production Operations | Workover / Drilling Operations |
|---|---|
| ▪ Wellheads and wellbays<br>▪ Production areas and process areas<br>▪ Separators and pressure vessels<br>▪ Flammables and hydrocarbon tanks<br>▪ Flammables and hydrocarbon vents<br>▪ Header systems<br>▪ Flanges<br>▪ Valves<br>▪ Controllers and instrumentation<br>▪ Pig traps<br>▪ Hydrocarbon sump systems<br>▪ Enclosed or inadequately ventilated buildings (where there is a potential for an explosive atmosphere)<br>▪ Coatings or painting operations<br>▪ Chemical, waste transfer, and storage locations<br>▪ Sewers and deck drains<br>▪ Flammable dusts | ▪ Rig floor<br>▪ Sub-rig floor area<br>▪ Mud manifold<br>▪ Mud tanks, ditch, or trench<br>▪ Mud pump in enclosed location<br>▪ Shale shaker<br>▪ De-sander, de-silter, de-gasser, or vent<br>▪ Diverter line vent opening |

**Hot work location**

A hot work location is one that the PU has classified as containing or having the potential to contain hydrocarbons or other flammable or combustible materials. Any hot work activities within a classified area **must** be conducted under a Hot Work Permit.

*Continued*

DocuSign Envelope ID: DBC83A32-C98A-4963-9E1E-44593247DA33



## Hot Work, Continued

**Hot work safety requirements**

The following table lists the requirements for establishing fire-resistant barriers when there are points of potential hydrocarbon discharge on piping or equipment when conducting hot work activities.

Table 3-3 Hot Work Barrier Requirements

| Potential hydrocarbon source on piping or equipment located… | THEN… |
|---|---|
| Within **10 ft (3 m)** of the hot work location | ▪ Shut down and depressure the production/process area, wellhead/wellbay, and other equipment or effectively shield them from the hot work activity using a habitat (The type of habitat **must** be determined based on the risk).<br>▪ Any potential hydrocarbon or flammable sources or materials within 35 ft (11 m) **must** be protected.<br>▪ Other hot work controls and precautions identified in this section **must** be in place.<br>! **IMPORTANT:** Hot work controls **must** address hazards located at higher and lower elevations. |
| Between **10 ft (3 m)** and **35 ft (11 m),** or within **85 ft (26 m)** for high vapor pressure liquids (such as, propane or butane) of the hot work location | ▪ A fire-resistant wall or barrier **must** be erected between the hot work and the piping, or equipment **must** be shut in.<br>▪ Any potential hydrocarbon or flammable sources or materials within the applicable distances **must** be protected.<br>▪ Other hot work controls and precautions identified in this section **must** be in place.<br>! **IMPORTANT:** Hot work controls **must** address hazards located at higher and lower elevations. |
| Beyond **35 ft (11 m)** or **85 ft (26 m)** for high vapor pressure liquids (such as, propane or butane) of the hot work location | Use of barriers or shutting down equipment is discretional with reliance on the JSA to determine any controls and precautions required, taking into account the conditions of the day (for example, wind speed and direction, elevation, adjacent activities, exposures above or below the hot work site, and so forth). |

DocuSign Envelope ID: DBC83A32-C98A-4963-9E1E-44593247DA33



## 3.3.1 Hot Work Permit Considerations

**Introduction**

Hot work activities within a classified area **must** be conducted under a Hot Work Permit unless the work is performed in a *designated welding area* or workshop setting that meets certain criteria below. Hot work should be performed in a designated hot work area where possible.

**Designated hot work areas**

Hot work can proceed without a Hot Work Permit if the following conditions are met:

- The area is a designated hot work area.
- No flammable or combustible liquids, gases, or materials are present.
- The area is defined by fences, ropes, or barriers.
- Access is restricted, when practicable.
- A protective screen around electric arc welding is provided to protect other personnel from eye damage.
- The area is clearly communicated and identified by signage.

**Designated onshore workshop**

Hot work can proceed without a Hot Work Permit in an *onshore* designated workshop setting that is outside of the process area if the following conditions exist:

- The work is on equipment, pipe, or a vessel that has been rendered completely free of hydrocarbon or combustible substances.
- Safeguards or checks for the presence of naturally occurring radioactive material (NORM), lead-based paint, and pyrophoric scale are implemented if the work is on process equipment removed to the workshop.
- No flammable materials are within 10 ft (3 m) of the hot work activity.
- Shielding is erected to contain all sparks or hot metal particles, if there are any flammables within 35 ft (11 m).
- Shielding is provided to protect others entering the workshop from arc flash, or to exclude others from entering.
- Fire extinguishers are readily available at the hot work site.

▲ **CAUTION:** An appropriate intake and exhaust ventilation system is required for a workshop to be an acceptable hot work location.

▲ **CAUTION:** Personnel should always assume that hot work is in progress in the workshop and take the proper precautions upon entering.

*Continued*

DocuSign Envelope ID: DBC83A32-C98A-4963-9E1E-44593247DA33



## Hot Work Permit Considerations, Continued

**Designated offshore workshop**

*In addition to the conditions for onshore workshops,* hot work may proceed without a Hot Work Permit in an *offshore* workshop setting if the following additional conditions exist:

- The workshop is pressurized and has gas detectors in service.
- Oxygen and acetylene cylinders are stored outside the building.
- Acetylene, oxygen, and service air lines have automatic shutoff valves that close upon loss of power to the workshop.
- A manual fire pull station is near the exit.

**Temporary Defeat of fire protection systems**

For hot work outside the living quarters or an approved workshop, the following restrictions apply:

- Temporary Defeat of the passive and active fire and gas protection systems is not allowed where hot work is taking place unless adequate mitigating measures are initiated. For example:
  - Direct monitoring performed by the Operator or Standby Person in the affected area
  - Availability of direct communication with the Central Control Room (CCR) in the event of an incident
  - Availability of fire extinguishers or fire hoses
  - Approval for the temporary defeat is obtained

**Restrictions**

Specific activity restrictions and safety precautions associated with a Hot Work Permit depend on the exact nature and location of the work. The specific activity restrictions should be identified by the following:

- Job planning and scheduling (work description, interface identification)
- Job safety planning
- SIMOPS Matrix and Restriction Tables

**References:**

- Section 6.1.3, "SIMOPS Matrix"
- Section 6.1.4, "SIMOPS Restrictions Tables"

**Multiple hot work permits**

Multiple Hot Work Permits for activities taking place in the same area of any facility and outside of a pressurized workshop should be Risk Assessed and may require additional mitigations to be implemented.

DocuSign Envelope ID: DBC83A32-C98A-4963-9E1E-44593247DA33



## 3.3.2 Hot Work Risk Management

**Introduction**

Risk management is the process of identifying potential hazards, undesirable consequences, and mitigation steps for hot work so appropriate precautions can be taken to minimize these undesirable consequences as low as reasonably practicable.

**Hazards**

The potential hazards of hot work are the generation of:

- Sparks or temperatures high enough to ignite flammables and combustibles
- Eye-damaging light during electric arc welding
- High amount of electrical energy during electrical arc welding
- Noxious or poisonous fumes

**Potential consequences**

The potential consequences of hot work are:

- Ignition of hydrocarbons or flammable materials if present. It is noted that:
  - Hot work can throw sparks or hot metal some distance from the source if not contained and can cause burns to personnel and damage to equipment if hydrocarbons or flammable materials are ignited.
  - Some hot work activities require time for the equipment or metal to cool to a temperature that is below the ignition temperature of hydrocarbons.
  - Some hot work activities have the ignition source present for a long time (for example, use of resistance mats).
- Looking at electric welding arcs can cause permanent damage to vision.
- The fumes generated by hot work may be hazardous or poisonous if inhaled.
- Electrocution or electrical burns.
- Heat burns from hot surfaces.

**Mitigation steps**

Potential risk mitigation steps for hot work are:

- Remove the item that requires hot work to a nonhazardous area.
- Use cold cut methods when possible.
- Schedule hot work to coincide with planned facility or equipment shutdowns.
- Conduct a JSA and Structured Risk Assessment, if required.
- Restrict conflicting work in adjacent areas.
- Conduct atmospheric testing.
- Use specific job procedures.
- Control health hazards.
- Use appropriate personal protective equipment (PPE).
- Use barriers and spark containment (habitats, fire-resistant blankets, and so on).
- Emergency preparedness.

DocuSign Envelope ID: DBC83A32-C98A-4963-9E1E-44593247DA33



## 3.3.3 Control of Hot Work Health Hazards

**Introduction**

Welding or burning operations can generate metal fumes, gases, and dusts which can be hazardous to worker respiratory systems. Other hazards include potential damage to eyes and hearing as well as skin burns. This section describes the measures required to prevent these hazards from injuring workers while performing hot work.

**Hazardous fumes and vapors**

Welding or burning operations can generate metal fumes, gases, and dusts. The contaminants can include lead, nickel, carbon monoxide, iron oxide, oxides of nitrogen, ozone, NORM, chromium, and zinc. The sources of hazardous fumes, the various welding and cutting processes, and the hazards they represent are as follows:

- Resins or coatings on electrodes.
- Surface coatings on the metal-like galvanizing or paint (especially lead-based paint).

  ! **IMPORTANT:** For work that will disturb existing paint or coatings containing greater than 0.5% lead, it is necessary to remove the paint or coating before welding or cutting proceeds.

- Gases that are added to the process such as carbon dioxide, argon, and helium
- Gases formed by electric arcs such as ozone or oxides of nitrogen.
- Manual metal arc welding creates metal fumes and the resulting ozone levels often exceed acceptable toxic exposure limits and thresholds.
- Gas metal arc welding creates metal fumes that exceed acceptable toxic exposure limits and thresholds.
- Gas tungsten arc welding creates welding fumes that are usually below the toxic exposure limits and thresholds, but the resulting ozone levels can be well above acceptable toxic exposure limits and thresholds.
- Cutting, particularly plasma cutting, can generate large quantities of fumes and dust and may also be very noisy.
- NORM residue and dust can release fumes during welding.
- Leaking or damaged oxygen or acetylene hoses and fittings can present both a health and explosion hazard.
- Grinding, burning, and abrasive blasting generate large quantities of fumes and dust and may also be very noisy.

*Continued*

DocuSign Envelope ID: DBC83A32-C98A-4963-9E1E-44593247DA33



## Control of Hot Work Health Hazards, Continued

**Ventilation or respiratory protection**

Monitoring of welding, cutting and burning processes has consistently shown the potential for unacceptable exposure to metal fumes and particulates. The following recommendations are made in relation to ventilation of hot work areas:

- Within a habitat or enclosure there should be extraction ventilation and makeup air. Testing has shown that even habitats or enclosures without roofs are prone to the buildup of unacceptable concentrations of heavier metal fumes if they are not ventilated.
- In an open environment, there is less risk of unacceptable levels of metal fumes building up. However, the position of the welder's face over the job may mean that exposures to welding fumes are unacceptably high. Local exhaust ventilation **must** be considered in each individual case, particularly if the plume can be seen rising into the breathing zone.

The only exception to the use of ventilation may be when the proper respiratory protection is worn. In certain circumstances a powered air purifying respirator or supplied-air breathing apparatus may be used as this can combine a welding helmet with respiratory protection and offers a higher degree of protection. A Safety Advisor or Industrial Hygienist should be consulted on the choice of a suitable respirator.

**Hot work in a confined space**

For hot work inside pressure vessels or tanks the use of a habitat is not required. However all other hot work and confined space entry requirements **must** be met to protect personnel and equipment from any hazards.

DocuSign Envelope ID: DBC83A32-C98A-4963-9E1E-44593247DA33



## 3.3.4 Hot Work Precautions

**Introduction**

This section describes the general precautions to be followed when performing hot work. Prior to performing hot work, alternatives to hot work in the process area should be considered to minimize the hazards to workers and the company facilities.

**Job planning**

Hot work jobs should be assessed for hazards and complexity to determine if job-specific procedures should be prepared. The following should be considered in planning a hot work job:

- Determine if hot work can be eliminated.
- Identify and document any job-specific procedures that are required to address:
  - Technical job requirements
  - Welder certification requirements
  - Hazard and risk mitigation assessment
  - Job preparation requirements
  - Emergency procedures
  - Barrier requirements
- Obtain a Hot Work Permit.
- Confirm that the appropriate PPE is available on the job site and is operational.
- Confirm the appropriate barriers, spark containment, and site protection.
- Confirm that an appropriately equipped and competent Fire Watch is present (if required).
- Identify requirements for atmospheric testing (initial, periodic and continuous).

**Site precautions**

Use the following general site precautions:

- Only approved scaffolds to be used for access, if required.
- All equipment, hoses, and cables **must** be adequately rigged and protected to prevent the blocking of evacuation routes, damage, or becoming a trip or fire hazard.
- Equipment **must** be grounded (earthed).
- All drains at a minimum distance of 35 ft (11 m) from the work location **must** be plugged and water-filled or properly covered.
- Before welding, burning, or grinding, all drums, barrels, or other closed containers that contain or may contain combustible materials **must** be:
  - Removed from the work area
  - Thoroughly steamed
  - Filled with water
  - Made safe by other approved methods

*Continued*

DocuSign Envelope ID: DBC83A32-C98A-4963-9E1E-44593247DA33



## Hot Work Precautions, Continued

**Hot work on hydrocarbon systems**

Welding and burning, other than associated with approved hot tapping, **must not** be conducted on pipes, vessels, or systems containing hydrocarbons or other flammable substances unless the following actions are taken:

- Shut down the equipment.
- Isolate the equipment from hydrocarbon sources and other potential energy sources.
- Depressurize the equipment.
- Purge or inert the equipment to an oxygen content of less than 1%.
- Clean the equipment of any hydrocarbon deposits or debris
- Hot work **must not** be conducted during breaking containment activities on the equipment or in the area.

**Reference:** Section 6, SIMOPS matrix and Restrictions Table

Note: Special precautions must be used when welding on certain systems. For example, some chemicals when subjected to heat can create poisonous gases, or oil vapors in some systems can create an explosion hazard.

**PPE**

Personnel performing hot work **must** wear personal protective equipment (PPE) appropriate for the job they are performing. The PPE requirements should be specified on the Job Safety Analysis. Typical hot work PPE includes the following:

- Protective clothing for protection from arc burns, sparks, slag, and hot surfaces such as face shields, hoods and gloves, and so forth
- Hard hats (where there is potential for head injury)

  ! **IMPORTANT:** Welding hoods do not provide sufficient head protection.

- Eye protection
- Glare protection
- Breathing apparatus in any of the following situations:
  - During welding, burning, or grinding on painted or coated surfaces or on pipes or vessels containing materials that may produce noxious gases
  - If there is no proper ventilation
  - Welding in narrow or poorly ventilated spaces

*Continued*

DocuSign Envelope ID: DBC83A32-C98A-4963-9E1E-44593247DA33



## Hot Work Precautions, Continued

**Atmospheric testing and monitoring**

The following gas testing and monitoring requirements **must** be followed during hot work:

- An Authorized Gas Tester [AGT] **must** take gas readings with a portable gas detector and the area declared gas-free before the work commences. Initial and periodic test results **must** be recorded on the gas test record.
- A portable gas detector **must** be used throughout the job.

! **IMPORTANT:** Portable gas detectors **must** have current calibrations.

**Reference:** Section 5, "Gas Testing," for additional information

**Fire Watch**

A Fire Watch is required when conducting hot work except for locations or activities designated by the Production Unit (PU).

The Fire Watch **must**:

- Know his or her duties as a Fire Watch.
- Know the hazards that may be encountered during hot work.
- Know the appropriate emergency responses in the event of an incident.
- Be trained and competent in use of the portable gas detector to be used during the job.
- Sign the Work Team Declaration section of the Hot Work Permit.
- Continuously monitor the hot work activity and surrounding area.
- Continue monitoring for at least 30 minutes after the work is completed to allow hot surfaces to cool and the work area deemed safe.

**Fire-fighting equipment**

At the minimum, one fire extinguisher **must** be positioned at the Fire Watch location and be ready for immediate use before starting the hot work as follows:

- The fire extinguisher **must** be designated for Fire Watch use only and appropriate for the potential fire type and classification.
- Fire extinguishers **must not** be removed from a facility fire extinguisher station for Fire Watch use if there is no redundancy.

Before hot work begins, the following precautions should be considered:

- A charged fire hose available for use by the Fire Watch.
- A charged deluge system.
- Additional backup fire extinguishers may be positioned at the Fire Watch location.

*Continued*

DocuSign Envelope ID: DBC83A32-C98A-4963-9E1E-44593247DA33



## Hot Work Precautions, Continued

**Radio silence**

In the event of an activity that requires radio silence:

- Electric welding **must not** be performed during the radio silence; permits will be suspended.
- Other hot work activities may be allowed if the Area Authority approves them.

**Electrical hot work equipment**

When performing duties with electrical hot work equipment that is not in an approved workshop or designated welding area the following precautions **must** be taken:

- The electrical equipment **must** be disconnected in the following situations:
  - Alarm situations
  - Exercises, such as fire and gas drills
  - Work breaks
- Engine-driven welding machines **must**:
  - Have controls and accessories that are in good operating condition.
  - Be installed, operated, and maintained consistent with the manufacturer's recommendations.
  - Have properly insulated cables and electrode holders.
  - Be shut down or turned off when not in use.
- Follow these rules when using arc welding cable:
  - The cable insulation **must** be in good condition to avoid arcing.
  - Use only enough cable to reach the job.
  - Keep the remainder of the cable rolled on racks.

**Training**

The following training requirements apply to hot work:

- Welders **must** be certified on the type of welding they perform. Certification documentation should be available on site.
- Fire Watches **must** demonstrate knowledge and competency in performing their duties.
- Every person in the work party **must** be familiar with the operation and location of all safety equipment provided in the hot work area (fire extinguisher, facility status lights, telephones, surface process shutdown buttons, and the methods of operating the deluge system) and is aware of all emergency procedures and notifications.

DocuSign Envelope ID: DBC83A32-C98A-4963-9E1E-44593247DA33



# 3.4 Confined Space Entry

**Introduction**

This section discusses Confined Space Entry (CSE) Permits and precautions to be taken while performing activities within confined spaces. This section also discusses the responsibilities of personnel and the protective measures to be taken during confined space activities.

Applicable Integrity Critical Procedures (or Integrity Critical Procedure Checklist) and applicable Safe Work Practice Checklists **must** be part of the Permit Pack. PU procedures and safe work practices should align with the *Upstream Safety Manual*.

**Reference:** Section 3, "Tools," for SWP Checklists

**Confined space definition**

A confined space is defined as an area that meets the following requirements:

- Is not designed for continuous occupancy.
- Large enough and configured so that a person's head can enter the space.
- Has limited or restricted entry or exit.

And one or more of the following:

- A substance that has the ability to engulf or asphyxiate the entrant.
- A potentially hazardous atmosphere.
- Has an internal configuration that may cause an entrant to be trapped or asphyxiated by inwardly converging walls or by a floor the slopes downward, and tapers to a smaller cross-section.

**Confined space entry**

The Confined Space Entry Permit covers any entry into a confined space. Entry occurs when the breathing zone of the worker breaks the plane of the confined space opening. The entire body does not have to be inside the space for it to be considered an entry.

! **IMPORTANT:** Care **must** be taken to protect workers from hazardous atmospheres near openings even when the breathing zone of the worker does not break the plane of the opening or space.

! **IMPORTANT:** A confined space within a confined space needs to be treated as a separate CSE (for example, pontoons in a floating roof tank).

*Continued*

DocuSign Envelope ID: DBC83A32-C98A-4963-9E1E-44593247DA33



## Confined Space Entry, Continued

**Confined space examples**

Each PU **must** identify the confined spaces in their facilities. It is recommended that facilities Confined Spaces have signs or identifiers. In addition, the safety planning done on every job **must** evaluate the possibility that the work site meets the confined space definition criteria and determine if a confined space entry procedure is required. Confined spaces may include:

- Storage tanks, process vessels, steam generators, boilers, pressure vessels, skirted areas under vessels, vaults, any tank-like compartments (such as, helicopter fuel tanks)
- Transformers
- Open-topped spaces and diked areas (dikes over 4 ft [1.2 m] high), such as pits, excavations, bunds, wellhead cellars, basements (turbine or compressors) and tanks
- Pipes, piping raceways, sewers, sumps, shafts, ducts, and similar structures
- Any shipboard space entered through a small hatchway or access point, cargo tanks, cellular double-bottom tanks, ballast tanks, compartments, oil tanks, helicopter fuel tanks, and void spaces

! **WARNING:** A person whose upper body or head is within the confined space or whose head can be periodically within the confined space (for example, while digging a trench) is considered to have entered a confined space. For a trench or excavation, a person is considered to have entered a confined space if the person's head is *below ground level*.

**Confined Space Entry Permit**

The Confined Space Entry Permit is blue in color and required for all confined space entry operations. The permit allows entry for inspection and for performing atmospheric testing; the permit does not allow any specific work to take place within a confined space. Any work within a confined space **must** be carried out under a separate work permit.

**Reference:** Section 3, "Tools," Confined Space Entry Permit

! **IMPORTANT:** If any doubt exists on what constitutes confined space entry or what requires a Confined Space Entry Permit, the Area Authority provides the necessary guidance on the minimal requirements for the work to be carried out.

! **IMPORTANT:** A separate confined space entry permit is required for each confined space to be entered.

DocuSign Envelope ID: DBC83A32-C98A-4963-9E1E-44593247DA33



## 3.4.1 Assessing Confined Space Entry Hazards

**Introduction**

This topic discusses the requirement to assess the condition of a confined space before starting work, and the required precautions to be followed during work based on the entry class determination.

**Assessing confined space condition**

Before issuing a Confined Space Entry Permit, the condition of the confined space or vessel **must** be assessed to determine its entry class. Checks should be made for:

- Atmospheric content, including in the following order:
  - Oxygen levels
  - Flammable gases and vapors
  - Potential air contaminants or toxic substances

  ! **IMPORTANT:** Initial gas testing done from outside the vessel can become unrepresentative when residual material inside the confined space is disturbed, or the ambient temperature rises.
- Cleanliness of the confined space interior (to determine whether further cleaning of the interior is required before vessel is entered).
- Radioactivity levels (determines if radioactive protection suits are required).
- Any obstructions or voids within the space that could pose a risk of injury.
- Verify energy isolation, including any moving parts are isolated and secured.

**Improving confined space condition**

Once the condition of a confined space is assessed, the following steps should be considered to improve the condition of the confined space, if necessary:

- Additional ventilation
- Additional Purging
- Additional drainage and removal of residual materials (i.e. scale, sludge, fluids)
- Cleaning of interior

**Confined space entry class determination**

Total hydrocarbon content (THC) and lower explosive limit (LEL) gas tests **must** be conducted to determine the entry class of all entries into confined spaces that contain or have contained hydrocarbons.

A benzene test is required for all entries into confined spaces that are known to be exposed to a hydrocarbon stream with benzene greater than 0.1% by weight.

Consideration **must** be given to other potential hazardous materials that are specific to the operation and production stream, for example, mercury, NORM, asbestos, refractory linings, and catalysts.

Table 3-4 should be used to determine the entry class.

*Continued*

DocuSign Envelope ID: DBC83A32-C98A-4963-9E1E-44593247DA33



## Assessing Confined Space Entry Hazards, Continued

Table 3-4 Confined Space Entry Class Determination

Note: Limits are subject to change periodically. Confirm local regulatory requirements and apply highest level of control.

| Type of Gas | Class 1 Entry Allowed Without Respiratory Protection [1] Atmospheric Concentration | Class 2 Entry Allowed With Respiratory Protection [2] Atmospheric Concentration |
|---|---|---|
| Oxygen | ≥ 19.5% to ≤ 23.5% | >16% to 19.5%<br>Not permitted if > 23.5% |
| Flammability: Non-Hot Work | < 1% of LEL (HC) | < 10% of LEL (HC) |
| Flammability: Hot Work | 0% of LEL (HC) | 0% of LEL (HC) |
| Total Hydrocarbon Content (THC) (toxicity) | < 500 ppm | < 1,000 ppm [IDLH] |
| Benzene | < 0.5 ppm | < 500 ppm [IDLH] |
| $H_2S$ | < 5 ppm | < 100 ppm [IDLH] |
| $SO_2$ | < 0.5 ppm | < 100 ppm [IDLH] |
| $CO_2$ | < 5,000 ppm | < 40,000 ppm [IDLH] |
| CO | < 25 ppm | < 1,200 ppm [IDLH] |
| Organic Lead | < 0.1 mg/m$^3$ | ≥ 0.1 mg/m$^3$ |

**Confined space entry class determination,** continued

! **WARNING:** Entry into atmospheres above the Class 2 limits **must not** be conducted.

! **IMPORTANT:** Values can change periodically. The Medical & Occupational Health (MOH) intranet site has the latest limits.

Notes:

1 The values equate to the levels to which personnel may be exposed safely for up to eight hours/day.

2 For confined spaces where the levels of one or more contaminants are within the ranges represented in the Class 2 column, respiratory protection must be worn for entry to be allowed. Monitoring of the atmosphere must be conducted at intervals appropriate to the conditions that might affect the concentration of gases, hydrocarbons, or toxins in the air. If air monitoring or gas testing indicates that the level of contaminant(s) is increasing and appears likely to exceed those within the Class 2 range, personnel must be evacuated immediately.

! **IMPORTANT:** The Confined Space Entry Class Determination table does not consider any possibility of NORM within the confined space. Presence of NORM may require the use of respiratory protection, particularly if disturbed.

THC and benzene tests may be discontinued after two consecutive days' tests indicate that exposure levels for the entry classes are not exceeded. If the vessel contains sludge or walls are impregnated, then THC and benzene **must** be monitored daily regardless of previous readings.

DocuSign Envelope ID: DBC83A32-C98A-4963-9E1E-44593247DA33



## 3.4.2 Confined Space Entry Risk Management

**Introduction**

Risk management is the process of identifying potential hazards, undesirable consequences, and mitigation steps for performing confined space entry jobs so appropriate precautions can be taken to minimize these undesirable consequences as much as is reasonably practicable.

**Hazards**

The potential hazards of work in a confined space are:

- Explosive, toxic, and oxygen-deficient or excessive atmosphere.
- Limited access into and egress from a confined space.
- Improper isolation of energy or chemical sources into a confined space.
- Existence of moving parts, obstructions, and voids within a confined space.
- A confined space within a confined space.
- Corroded internal structures may collapse.
- Live equipment within confined space (such as, asbestos removal enclosure).
- Existence or generation of residual hydrocarbons, benzene, or hydrogen sulfide ($H_2S$) pyrophoric scale (iron sulfide [FeS]), $SO_2$, steam, $CO_2$, $N_2$.
- Existence of naturally occurring radioactive material (NORM) or low specific activity (LSA) within process vessels.
- Concentration of dangerous chemicals or fumes within a confined space.
- Presence or generation of explosive or flammable gases.
- Flammable or toxic materials introduced when conducting the work (for example, pressurized canisters, leaking oxygen, or acetylene hoses or fittings and sprays).
- Disturbing residual material or increase in ambient temperature can generate toxic or flammable vapors (or both).
- Existence of asbestos gaskets or fiber particles.
- Electrocution.
- Falls, trips, and slips.
- Entrapment.
- Claustrophobia.
- Reduced visibility.
- Exhaustion.
- Drowning.
- Dropped objects from overhead.
- Heat and cold stress.
- Unstable physical containment of surroundings (for example, trenches and excavations, steep slopes, soil conditions).
- High levels of noise within a confined space.
- Difficulty in communicating or seeing alarms while in a confined space.
- Difficulty in conducting rescue operations (restricting personnel in the space).

*Continued*

DocuSign Envelope ID: DBC83A32-C98A-4963-9E1E-44593247DA33



## Confined Space Entry Risk Management, Continued

**Potential consequences**

The potential consequences of work in a confined space are:

- Inhalation of or exposure to dangerous chemicals, gases, or fumes
- Exposure to hazardous atmosphere due to leak from live equipment
- Asphyxiation due to lack of oxygen
- Exposure to NORM or LSA
- Ignition or explosion
- Engulfment
- Injury from moving parts, obstructions, or voids
- Fall injury due to corroded structure collapse
- Exposure to high levels of noise
- Not responding appropriately to external emergency situations
- Injury due to slips, trips, and falls
- Difficulty in exiting confined space in an emergency situation
- Heat stress
- Serious or fatal injury due to asphyxiation

**Mitigation steps**

The potential risk mitigation steps for work in a confined space are:

- Consider alternative methods for doing the work (avoid confined space entry).
- Refer to Material Safety Data Sheets, (SDSs), to determine required personnel protection.
- Standby person oversight of the confined space entry.
- Design enclosures and excavations to exclude live equipment or flanges where possible. If not possible, address risk in JSA.
- Careful planning of the job requirements.
- Creation of a confined space entry plan, procedure, permits, and work practices.
- Confined space preparation (isolation, cleaning, purging, and ventilation).
- Initial and continuous atmospheric testing and monitoring.
- Personal protective equipment relative to the hazard.
- Breathing apparatus.
- Communications.
- Emergency response plan and rescue equipment.
- Lighting equipment.
- Personnel training.
- Good housekeeping—removal of sludge, debris, and tripping hazards.
- Barricade or cover voids and identify or eliminate obstructions.
- Inspect corroded internal structures for integrity.
- Appropriate signage.
- Provide multiple entry and exit points if practical.

DocuSign Envelope ID: DBC83A32-C98A-4963-9E1E-44593247DA33



## 3.4.3 Confined Space Entry Precautions

**Introduction**

This section describes the general practices and precautions to be followed during confined space entries. A Confined Space Entry Supervisor should be appointed to oversee all aspects of planning and executing confined space entry work. The Permit Holder may fulfill this role.

**Job planning**

The complexity and risks associated with the confined space entry should be used to determine if a job-specific procedure should be prepared. In addition, the following general practice should be followed:

- Before starting a confined space entry plan, personnel **must** complete the following requirements:
  - Visit the work site.
  - Plan the work.
  - Conduct a Task Hazard Assessment.
  - Prepare a JSA.
- Request a Confined Space Entry Permit. The Confined Space Entry Permit authorizes entry into the confined space. A Critical Work Permit, Hot Work Permit, General Work Permit or JSA will be required for any work to be conducted in the confined space.
- Prepare and execute an energy isolation plan to remove energy sources that are potentially hazardous to the workers who will enter the confined space. Energy sources **must** be isolated and made safe (see Section 4 for Energy Isolation requirements).
- Evaluate the status of other activities e.g. Drilling nearing the pay zone or having downhole difficulties at the time.
- Write job-specific procedure or checklist (or both) appropriate to the complexity of the job that should include:
  - Work scope
  - Job preparation requirements
  - Emergency, communication, and rescue procedures/process
- Prepare emergency and safety equipment:
  - PPE
  - Safety and rescue equipment
  - Atmospheric testing equipment

*Continued*

DocuSign Envelope ID: DBC83A32-C98A-4963-9E1E-44593247DA33



## Confined Space Entry Precautions, Continued

**Job planning**, continued

- Make an initial assessment of the condition of the confined space or vessel and determine the entry class for the confined space entry. This initial entry **must** be performed wearing appropriate PPE and taking precautions for the worst expected conditions.

  **Reference:** Section 5.2, "General Gas Testing Practices," under the heading "Gas testing in confined spaces"

- Once the condition of a confined space is assessed, risk mitigation steps **must** be considered to improve the condition of the confined space if necessary.
- Prepare a Permit Pack with all safety precautions detailed and obtain approval of the CSE Permit. The CSE Attendant/Standby Person **must** also sign on to the CSE permit.
- Establish the confined space for work according to the requirements including the regulations specific to the work.
- The atmosphere **must** be tested according to the requirements.
  - Ventilation, if required, **must** be maintained and monitored and be alert to any short circuiting that may prevent ventilation of the entire space.
- Rescue personnel **must** be available at the facility, pre-briefed on the rescue plan, and notified of confined space entry and exit.
- Access points **must** be protected from entry when work is not ongoing.

**PPE**

All required PPE including respiratory protection **must** be used as defined by the permit and conditions. Depending on the conditions inside the confined space, this equipment can include the following:

- Respiratory protection:
  - Approved positive pressure breathing apparatus
  - Positive pressure airline respirator equipped with an escape set
  - Air-purifying respirator equipped with the correct filters or cartridges for the air contaminants
- Hearing protection
- Communications equipment
- Personal detector or monitor as required by the hazard
- Rescue harness and lines

*Continued*

DocuSign Envelope ID: DBC83A32-C98A-4963-9E1E-44593247DA33



## Confined Space Entry Precautions, Continued

**Atmospheric testing**

Atmospheric testing, as prescribed in the job plan, includes testing prior to initial entry, and continuous thereafter while personnel are occupying the confined space. This test **must** check for:

- Oxygen levels
- Presence of hydrocarbons or other combustible gas
- Presence and concentration of toxic or hazardous materials (as determined by the JSA and assessment of the CSE hazards). Where applicable, refer to SDS when developing the JSA.

These results **must** be recorded on the Confined Space Entry Permit, "Atmospheric Test Record." If any gas concentrations are not within the limits for the type of confined space entry as defined in the Confined Space Entry Class Determination table, confined space activities **must** cease and the appropriate precautions **must** be taken for the new entry class.

The atmosphere within a confined space **must** be tested:

- As close as possible, but no longer than one hour, before the initial entry occurs. Ventilation **must** be shut down at least 30 minutes prior to the initial test.
- If entry is required for initial testing (insufficient external points to gain representative samples) the initial entry is with respiratory protection and all other CSE controls until the safety of the space is confirmed.
- After any cleaning or additional ventilation is performed to improve conditions.
- Continuously with a portable gas detector while personnel are wearing respiratory protection.

  ! **IMPORTANT:** Portable gas detectors **must** have current calibrations.

- Atmospheric testing within the confined space **must** be performed during the course of work because external activities can result in gas or toxic substances entering a confined space, such as:
  - Flange leak
  - Vessel blowdown
  - Activation of an atmospheric pressure safety valve (PSV)
- Work activities (hot work, chemical cleaning, use of dye penetrates, movement of sludge) may contaminate the atmosphere.

*Continued*

DocuSign Envelope ID: DBC83A32-C98A-4963-9E1E-44593247DA33



## Confined Space Entry Precautions, Continued

**Atmospheric testing**, continued

Continuous atmospheric testing **must** be done while personnel are wearing respiratory protection (for Class 2 entries):

- **Must** be done by means of a portable gas detector (with an alarm) that is placed inside the confined space for the types of hazards expected.
- May be done with the mechanical ventilation system operating.

Workers **must** vacate the confined space:

- If the gas detector alarm sounds.
- If conditions make it hazardous for them to work without the use of breathing apparatus or respirators.
- In the event of a facility emergency alarm.

**Ventilation and lighting**

In order to establish and maintain a safe working environment when personnel enter a confined space that poses an actual or potential atmospheric hazard, the confined space **must** be ventilated by natural air draft, forced air ventilation, or mechanical ventilation.

> Note: The use of continuous forced air ventilation is preferred for all confined space entries. For hot work within a confined space, additional ventilation requirements may be required to ensure safe atmosphere.

Adequate lighting **must** be provided at all times when workers are within a confined space. The following types of artificial lighting may be considered:

- Air driven
- Portable electric
- Self-contained (light sticks)

Should any electric cables for the use of lighting or other electrical equipment be required, an attempt should be made to route them into the confined space by a route other than the one being used for entry into or exit from the confined space. They should also be placed or protected in a manner that abrasion or movement cannot damage other pieces of equipment. Power **must** be isolated or switched off whenever the cables are being moved into or out of the confined space.

*Continued*

DocuSign Envelope ID: DBC83A32-C98A-4963-9E1E-44593247DA33



## Confined Space Entry Precautions, Continued

**Safety Watch / Attendant**

One or more personnel **must** act as a Confined Space Entry (CSE) Safety Watch/Attendant whenever work is performed for each Confined Space Entry.

The CSE Safety Watch/Attendant **must**:

- Review and sign the CSE Permit before anyone enters the confined space.
- Be trained in their duties and in how to use communications and rescue equipment.
- Perform no other duty that might interfere with their primary responsibility during the course of the confined space entry activities.

**Communications**

It is critical that the following communications links be established and maintained while personnel are inside a confined space:

- Communication between all personnel inside the confined space and the Safety Watch/Attendant.
- Communication between the Safety Watch/Attendant, the Control Room or Central Control Point, and rescue team. In areas where there is no Control Room or Central Control Point, the Safety Watch/Attendant **must** have communication with the Area Operator in all instances.

These communication links **must** be:

- Effective (able to be clearly understood by all parties regardless of background noise levels within and outside the confined space).
- Reliable (not subject to failure, such as battery failure, without having backup equipment immediately available).
- Instantaneous (able to be used immediately at any time regardless of the position of the relevant personnel).

*Continued*

DocuSign Envelope ID: DBC83A32-C98A-4963-9E1E-44593247DA33



## Confined Space Entry Precautions, Continued

**Rescue provisions**

Rescue provisions **must** be provided for the specific hazards and conditions of the entry:

- Contains or has the potential to contain:
  - A hazardous atmosphere.
  - An oxygen-deficient atmosphere.
- Has the potential for engulfing the worker e.g. a collapsed trench.
- Has an internal configuration such that the worker could be trapped or asphyxiated by inwardly converging walls or a floor that slopes downward and tapers to a small cross section.
- Contains any other recognized safety or health hazard.

Rescue teams **must** be adequately trained and equipped for the rescue.

▲ **CAUTION:** The Confined Space Entry Safety Watch/Attendant may enter a confined space to attempt rescue if he or she is trained and equipped for rescue operations and if another qualified Standby Person is assigned the duty of attending the confined space with backup breathing apparatus before rescue operations begin.

! **IMPORTANT:** Rescue provisions may include non-entry rescue techniques. Workers who perform tasks or emergency-response activities that may require respiratory protection equipment **must** be trained before using the equipment and **must** understand the limitations of respirators, including their impact on communication.

**Entry recording**

All entrants entering a confined space **must** inform the CSE Safety Watch/Attendant and confirm that their names are recorded on the Confined Space Entry – Personnel Log-In/Log-Out Sheet (on the back of the CSE Permit located at the entrance to the confined space).

Upon exiting the confined space, all entrants **must** inform the Safety Watch/Attendant and confirm that their names are checked off the Confined Space Entry – Personnel Log-In/Log-Out Sheet.

*Continued*

DocuSign Envelope ID: DBC83A32-C98A-4963-9E1E-44593247DA33



## Confined Space Entry Precautions, Continued

**Confined space entry protection**

Voids within the confined space area **must** be covered to prevent a worker from dropping into the void and remain covered until completion of the activities. Obstructions that may be hazardous to personnel should be identified and eliminated or managed.

After completion of work in a confined space, entry into the confined space can still pose a potential hazard. The following precautions are taken:

- Cordon off the entry to the confined space and place appropriate signage
  **Example:** "Danger – Entry Permit Required – Do Not Enter"

  Note: Wording of danger signs can vary as long as the hazard is identified.
- Close the entry into the confined space as soon as practical.

**Potentially hazardous scale**

In some processes naturally occurring radioactive scale might be present. This is referred to as naturally occurring radioactive material (NORM or low specific activity [LSA] scale. The main danger of NORM is breathing in airborne radioactive dust particles. Whenever grinding, scraping, or needle-gunning activities are performed within the confined space, personnel within the space should use dust masks, suitable respirators, or breathing apparatus. Tests for radioactive scale **must** be conducted during the initial condition assessment of the confined space.

Iron Sulfide is a black, powdery, scaly compound that can be formed over a long period of time in an oxygen-free atmosphere by a chemical reaction between a sulfur compound such as hydrogen sulfide ($H_2S$) and iron oxide. Iron sulfide is a pyrophoric scale and should be kept wet. If the scale dries out in the presence of oxygen, it can oxidize rapidly and the resultant heat can cause it to ignite spontaneously. If a flammable mixture is present, it will ignite.

Disposal of pyrophoric scale into open containers is not recommended because this can result in fires either at the facility or during transportation. It is recommended that all scale and other materials removed from the vessel be immersed in water and that a suitable means of disposal be arranged.

*Continued*

DocuSign Envelope ID: DBC83A32-C98A-4963-9E1E-44593247DA33



## Confined Space Entry Precautions, Continued

**Job closeout**

After all work is completed, the following activities should be performed (where applicable):

- Confirm that all space internals are reinstated to their normal state. Verify that all internal residue and waste has been removed, and openings are clear of obstructions. These could include welding rods, demister pad fixing wire, rags, and so forth.
- Check to confirm that all tools and equipment are removed.
- Remove void covers and lighting equipment.
- Properly close all hatches used for ventilation and for routing hoses and electrical cables.
- The Area Operator and/or Area Authority **must** make a final inspection of any confined space entered before the hatch(es) are closed.

  ! **WARNING:** There **must** be no doubt that all people have exited the space, do not rely on the log-in/log-out register.
- The space **must** then be re-commissioned according to the process for reinstating facilities and equipment.

**Training**

Personnel who perform work in, or associated with, confined spaces **must** have specific, designated duties. They should be trained in:

- Possible hazards within the confined space.
- Symptoms of toxic effects due to exposure to hazardous materials that they could encounter in the confined space.
- Emergency procedures/process.
- Operation of simple fire-fighting equipment (for example, fire hose and dry chemical extinguisher).
- Operation of fall restraint or fall arrest equipment, if required.
- Self-rescue techniques.
- Use of the following:
  - All required personal protective equipment
  - Portable gas testers and personal monitors
  - Communications equipment
  - Ventilating equipment
  - Lighting equipment
- Duties of the CSE Standby Person (if assigned).

DocuSign Envelope ID: DBC83A32-C98A-4963-9E1E-44593247DA33



# 3.5 Critical Work Permit

**Introduction**

The Critical Work Permit is used to manage permit-required work activities where there are higher risks or special considerations. The Critical Work Permit is orange in color and is required for the critical work activities listed in this section.

**Reference:** Section 3, "Tools," Critical Work Permit

Applicable Integrity Critical Procedures (or Integrity Critical Procedure Checklist) and applicable Safe Work Practice Checklists **must** be part of the Permit Pack. PU procedures and safe work practices should align with the *Upstream Safety Manual*.

**Reference:** Section 3, "Tools," for SWP Checklists

*Continued*

DocuSign Envelope ID: DBC83A32-C98A-4963-9E1E-44593247DA33



## Critical Work Permit, Continued

**Critical work permit activities**

Critical work activities follow the same permitting process described in Section 3.2, "Completing the Work Permit." Examples of critical work activities requiring a Critical Work Permit include (but are not limited to) the following activities.

Table 3-5 Critical Work Permit Activities

| Critical Work | Example Activities |
|---|---|
| Abrasive blasting | ▪ Sand or grit blasting<br>▪ Any high pressure blasting that could generate sparks or static electricity<br>▪ Blasting equipment that could cause serious injury |
| Breaking containment | Breaking the containment on equipment or systems such as hydrocarbons, chemicals, air, steam, fluids and gases.<br>Examples of breaking containment activities are:<br>▪ Unbolting flanges and manways or removing screwed fittings on systems, such as, pipes, vessels, exchangers, valves, turbines, compressors, and pumps<br>▪ Opening enclosures such as pig launchers or receivers and filter housings<br>▪ Opening vents or drains to atmosphere<br>▪ Removing orifice plates<br>▪ Taking samples (when venting or draining to atmosphere).<br>! **IMPORTANT:** A Critical Work Permit is not required (unless specified by the PU due to inherent risks such as $H_2S$, Benzene and NORM for venting, purging, or draining equipment to closed systems or to atmosphere conducted by a competent person during their normal duties, provided there are no interfaces or simultaneous operations (SIMOPS) issues to manage. However, a JSA or procedure may be required (refer below).<br>! **IMPORTANT:** A JSA is required when draining or venting to atmosphere unless the residual pressure being vented is below flare or closed drain pressures.<br>! **IMPORTANT:** If continuous venting to atmosphere at operating pressure is required for operational reasons, an approved procedure and JSA **must** be obtained. |

*Continued*

DocuSign Envelope ID: DBC83A32-C98A-4963-9E1E-44593247DA33



## Critical Work Permit, Continued

**Critical work permit activities**, continued

| Critical Work | Example Activities |
|---|---|
| Critical lift | A lift is classified as *critical* when one or more of the following applies [1][2]:<br>▪ Personnel Lifts (unless risk assessed and approved by Operations Manager) Operating limits and mitigations are stated on the critical lift exception sheet and signed by the Operations Manager.<br>▪ Lifts considered *non-routine* [3] lifting operations.<br>▪ The lift reaches 80% of:<br>– The crane's current certified capacity using the static and dynamic load charts<br>– The crane's design operating limits (for example, wind speed)<br>▪ Lifts over or near process or production equipment, accommodations or other sensitive areas that could result in significant damage to the facility (including considerations for the shape and weight of the load, rigging configuration, potential to drop all or part of the load, or environmental conditions).<br>▪ Lifts are over temporary equipment on which dropped objects could have undesirable consequences (for example, wireline units, nitrogen purging equipment).<br>▪ Lifts that are over or in proximity to energized electrical power lines.<br>▪ Lifts through hatches, congested areas, piping, and between decks that have a potential to damage the lifting equipment or structure.<br>▪ The use of two or more cranes or lifting appliances to lift a single load.<br>▪ Lifts of hazardous materials (that is, radioactive materials, cryogenics, and explosives).<br>▪ Activities using a work basket, bosun's chair, or any specially designed suspension harness that is being operated by a crane.<br>Notes:<br>1. Where country or local regulatory requirements are more stringent, the Regulations must always prevail.<br>2. Criteria for critical lifts may not be limited to the listed activities. The lifting operation can be re-categorized as critical due to factors such as installation-defined environmental considerations, lift areas and corridors, shape of lifted object, type of lifting appliance, and equipment used.<br>3. *Non-routine* lifts include nonstandard containers or baskets, umbilical or coiled tubing unit (CTU) reels, personnel transfers using cranes not done on a regular basis, loads where it is difficult to estimate weight and or center of gravity, and lifts where the load is lowered into or lifted from the confined space.<br>4. The use of multiple cranes requires Operations Superintendent approval. |
| Diving operations | All manned diving operations on, or adjacent to an operating facility, including activities on operating pipelines. |

*Continued*

DocuSign Envelope ID: DBC83A32-C98A-4963-9E1E-44593247DA33



## Critical Work Permit, Continued

**Critical work permit activities**, continued

| Critical Work | Example Activities |
|---|---|
| Excavation or ground disturbance | ▪ **Excavation:** Any fabricated cavity or depression in the earth's surface formed by earth removal that produces unsupported earth conditions as a result of the removal.<br>▪ **Cavity or trench:** A narrow excavation with a width no greater than 15 ft (4.6 m).<br>▪ **Ground disturbance:** Any digging, drilling, or other activity that penetrates the earth which could present a hazard. |
| High risk electrical | High risk electric work involves work on live electrical systems above Extra Low Voltage (ELV) levels. Extra Low Voltage circuits have a voltage not exceeding 50 Volts RMS A.C. or 120 Volts D.C. between conductors or earth. E.g. 24VDC instrument loops, CCTV, data networks etc.<br><br>High Risk Electrical Work also includes activities with the potential (accidental or otherwise) for individuals to come into contact with energized electrical components of 300 volts or greater, or to be exposed to high temperatures or flashes resulting from electrical arcing or electrical fault conditions.<br><br>Safety Watch/Standby Person<br><br>The HRE Safety/Standby person should (in addition to the Safety Watch responsibilities):<br><br>▪ Be familiar with job scope and hazards associated with the task.<br>▪ Be trained in the use of required electrical PPE.<br>▪ Be trained to perform basic first-aid, including CPR and use of an AED (if available).<br>▪ Know where and how to de-energized the electrical circuit or equipment.<br>▪ Sign onto all required permit pack documents.<br>▪ Keep non-essential personnel out of the work area.<br>▪ Be present during the safety critical task steps with no other work execution roles assigned (observe only).<br>▪ Be empowered to intervene or stop work if unsafe acts or conditions occur.<br>▪ In an emergency, know how to communicate and request additional help.<br>▪ Know when and how to remove the worker from an electrical hazard without endangering themselves.<br>! **WARNING:** The main duty of the Standby Person is to monitor the activity, stop work if an unsafe condition develops, and alert the area authority (AA) of any incidents so that appropriate emergency team can respond. The standby person **must not** enter the area if there is any potential for injury. |

*Continued*

DocuSign Envelope ID: DBC83A32-C98A-4963-9E1E-44593247DA33



## Critical Work Permit, Continued

**Critical work permit activities**, continued

| Critical Work | Example Activities |
|---|---|
| Work at heights (WAH) | ▪ Working at heights above 6 ft (1.8 m) without handrails or barriers.<br>▪ Work requiring the person's center of gravity to extend beyond the vertical plane of an approved scaffold or guardrail.<br>▪ Working within 6 ft (1.8 m) of an unguarded or unprotected edge on an elevated (exceeding 6 ft [1.8 m]) structure.<br>▪ In areas exposed to impaling hazards where the potential for injury exists by falling on them, even when the height is less than 6 ft (1.8 m).<br>▪ Rope access work (abseiling or rappelling).<br><br>Note: Personnel must have an approved rescue plan and not work alone when working at heights<br><br>**Reference:** ExxonMobil Work at Heights Safe Work Practice, for more detailed information. |
| Over-the-side work | Work outside an approved deck, or structure that could result in a fall to sea.<br>Note: Personnel must have an approved rescue plan and not work alone when working at heights<br><br>**Reference:** ExxonMobil Work at Heights Safe Work Practice, for more detailed information. |
| Work in exposed or congested locations | Any work in congested or tight areas that can result in injury due to moving equipment, energy release, or risk associated with the location (for example, hot or cold surfaces, sharp edges). |

*Continued*

DocuSign Envelope ID: DBC83A32-C98A-4963-9E1E-44593247DA33



## Critical Work Permit, Continued

**Critical work permit activities**, continued

| Critical Work | Example Activities |
|---|---|
| Spark potential (spark generating) in hydrocarbon processing areas or areas containing flammables | ▪ Meggering<br>▪ Engine-driven equipment (gas or diesel including vehicles and mowers)<br>▪ Nonclassified battery-operated equipment (e.g. cameras and laptops)<br>▪ Use of a heat gun or soldering iron at a temperature less than 400°F (200°C)*.<br>▪ Chipping (use of needle gun)<br>▪ Work on live, non-intrinsically safe electrical equipment in classified hazardous locations<br>▪ Use of electrical tools or lights not classified for hazardous locations<br>▪ Opening and working on live explosion-proof or flameproof enclosures<br>▪ Controlled post-weld heat treating (stress relief) (heat blankets) less than 400°F (200°C).<br>Note: A Hot Work Permit and associated controls are required if greater than 400°F (200°C). |
| Working on or with pressurized systems | ▪ Hot tapping activities<br>▪ Hot bolting activities<br>▪ Hydro cutting and hydro blasting (for example, tube cleaning)<br>▪ High pressure testing (for example, hydrotesting)<br>▪ Any other work that could result in a high pressure release from the operating system or equipment used |
| Working with explosives or detonation devices | ▪ Explosive fasteners<br>▪ Wellwork activities, such as:<br>– Tubing perforations<br>– Wireline operations<br>Note: A radio-safe detonating system uses a radio-safe blasting cap or electro-explosive that does not require radio silence. If radio-safe detonation systems are used, the Person in Charge (PIC) should determine if this mitigates the hazard. |

DocuSign Envelope ID: DBC83A32-C98A-4963-9E1E-44593247DA33



# 3.6 General Work Permit

**Introduction**

General Work covers a broad spectrum of activities, including some with the possibility for considerable potential hazards and related risk which require detailed planning and assessment, strict controls and mitigation measures, and structured approval and communication measures.

The General Work Permit does not cover the following permitted work activities:

- Hot work
- Confined space entry
- Critical work

However, work accomplished in conjunction with hot work, critical work, and confined space entry activities may require a General Work Permit.

The General Work Permit is green in color and is required for the types of general work activities listed in this section.

**Reference:** Section 3, "Tools," General Work Permit

Applicable Integrity Critical Procedures (or Integrity Critical Procedure Checklist) and applicable Safe Work Practice Checklists **must** be part of the Permit Pack. PU procedures and safe work practices should align with the *Upstream Safety Manual*.

**Reference:** Section 3, "Tools," for SWP Checklists

*Continued*

DocuSign Envelope ID: DBC83A32-C98A-4963-9E1E-44593247DA33



## General Work Permit, Continued

**General Work permit activities**

General work activities follow the same permitting process described in Section 3.2, "Completing the Work Permit." Production Units determine what general work activities will be permitted. At a minimum, the following types of general work activities require a General Work Permit:

- Erecting or dismantling of scaffold where the individuals involved are not working at heights greater than 6 ft or (1.8 m).

  **Reference:** *ExxonMobil Work at Height*s Safe Work Practice, for more detailed information

- Any work requiring supplied-air breathing apparatus.
- Working on vessels or equipment contaminated with low specific activity scale.
- Working with asbestos or mineral fiber.
- Spray painting (if not captured by using the Critical Work Permit for hazardous areas and equipment).
- Work in a confined space that does not fall into either the hot work or critical work categories.

  Note: This is in addition to a Confined Space Entry Permit that allows entry to the vessel.

- Handling or working with chemicals or industrial hazardous substances.
- Construction, maintenance, overhaul, or repair work not classified as hot work or critical work.
- Nitrogen or gas leak testing of plant and equipment.
- Rig skidding operations.
- Totally enclosed motor propelled survival craft (TEMPSC) maintenance or launching for training.
- Work involving the removal of grating, handrails, ladders, or lifting of hatch covers.

  Note: These activities may create a working at height scenario (Critical Work Permit).

- Bleeding down vessels to open drains or the atmosphere by a person other than the Area Operator performing their normal duties.

  ! **IMPORTANT:** If any doubt exists on what constitutes general work or what requires a General Work Permit, the PIC provides the necessary guidance on the minimal requirements for the work to be carried out.

**Other general work activities**

Other work activities not covered by a Critical, Hot, CSE or General Work Permit above are managed through procedures, safe work practices, work aids, Job Safety Analysis, and Last Minute Risk Assessment (e.g. *StepBack 5 x 5*).

DocuSign Envelope ID: DBC83A32-C98A-4963-9E1E-44593247DA33

DocuSign Envelope ID: DBC83A32-C98A-4963-9E1E-44593247DA33



## 3.7 Tools

**List of forms**

These forms are referenced in this chapter and listed on following pages:

3.7.1 Atmospheric Test Record
3.7.2 Atmospheric Test Record (Supplement)
3.7.3 Confined Space Entry Log-In/Log-Out Sheet
3.7.4 Work Team Declaration (Supplement)
3.7.5 Hot Work Permit
3.7.6 Confined Space Entry Permit
3.7.7 Critical Work Permit
3.7.8 General Work Permit

## 3.8 SWP Checklists

**List of forms**

These forms are referenced in this section and listed on following pages:

3.8.1 Breaking Containment SWP Checklist
3.8.2 Critical Lift SWP Checklist
3.8.3 Working at Height SWP Checklist
3.8.4 Diving Operations SWP Checklist
3.8.5 Excavation and Ground Disturbance SWP Checklist
3.8.6 High Risk Electrical Work SWP Checklist
3.8.7 Abrasive Blasting SWP Checklist
3.8.8 Hot Work SWP Checklist
3.8.9 Confined Space Entry SWP Checklist

# Work Management System Atmospheric Test Record

**Permit Number:**

**Area to be Tested:**

**Test and record frequency:**

Prior to work commencing: ☐ Yes ☐ No

Every _____ Hour(s): ☐ Yes ☐ No

Continuous gas monitoring required: ☐ Yes ☐ No

**Required Tests:**

☐ $O_2$ ☐ LEL ☐ $H_2S$ ☐ CO ☐ VOC ☐ Benzene ☐ $SO_2$ ☐ $CO_2$ ☐ Other _____

Detector used: _____ Calibration Date: _____

**Comments/Special Precautions:**

**Results (Pre-Start + Work Period Tests)**

| Check Local PU Limits | CSE Class 1 Limits | CSE Class 2 Limits | Pre-Start Test Result | Result | Result | Result | Result | Result | Result |
|---|---|---|---|---|---|---|---|---|---|
| **Date** | | | | | | | | | |
| **Time** | | | | | | | | | |
| **Oxygen ($O_2$)** | ≥ 19.5 to ≤ 23.5% | ≥ 16% to 19.5% or > 23.5% | | | | | | | |
| **Lower Explosive Limit (LEL)** Flammability – General Work | ≤ 1% of LEL (HC) | < 10% of LEL (HC) | | | | | | | |
| Flammability – Hot Work/Critical Work – Spark Potential | 0% of LEL | 0% of LEL | | | | | | | |
| **Total Hydrocarbon Content (THC)** | < 500 ppm | < 1000 ppm (IDLH) | | | | | | | |
| **Hydrogen Sulphide ($H_2S$)** | < 5 ppm | < 100 ppm (IDLH) | | | | | | | |
| **Carbon Monoxide (CO)** | < 25 ppm | < 1200 ppm (IDLH) | | | | | | | |
| **Benzene** | < 0.5 ppm | < 500 ppm (IDLH) | | | | | | | |
| **Sulphur Dioxide ($SO_2$)** | < 0.5 ppm | < 100 ppm (IDLH) | | | | | | | |
| **Other** | | | | | | | | | |
| **Authorized Gas Tester (AGT) Initials:** | | | | | | | | | |

**IMPORTANT:** Values can change periodically, check local Production Unit Class Limits or with Medical & Occupational Health (MOH)

DocuSign Envelope ID: DBC83A32-C98A-4963-9E1E-44593247DA33

# Work Management System - Atmospheric Test Record (Supplement)

**Permit Number:**

| Check Local PU Limits | CSE Class 1 Limits | CSE Class 2 Limits | Pre-Start Test Result | Result | Result | Result | Result | Result | Result |
|---|---|---|---|---|---|---|---|---|---|
| **Date** | | | | | | | | | |
| **Time** | | | | | | | | | |
| **Oxygen ($O_2$)** | ≥ 19.5 to ≤ 23.5% | ≥ 16% to 19.5% or > 23.5% | | | | | | | |
| **Lower Explosive Limit (LEL)** Flammability – General Work | ≤ 1% of LEL (HC) | < 10% of LEL (HC) | | | | | | | |
| Flammability – Hot Work/Critical Work – Spark Potential | 0% of LEL | 0% of LEL | | | | | | | |
| **Total Hydrocarbon Content (THC)** | < 500 ppm | < 1000 ppm (IDLH) | | | | | | | |
| **Hydrogen Sulphide ($H_2S$)** | < 5 ppm | < 100 ppm (IDLH) | | | | | | | |
| **Carbon Monoxide (CO)** | < 25 ppm | < 1200 ppm (IDLH) | | | | | | | |
| **Benzene** | < 0.5 ppm | < 500 ppm (IDLH) | | | | | | | |
| **Sulphur Dioxide ($SO_2$)** | < 0.5 ppm | < 100 ppm (IDLH) | | | | | | | |
| **Other** | | | | | | | | | |
| **Authorized Gas Tester (AGT) Initials:** | | | | | | | | | |

| Check Local PU Limits | CSE Class 1 Limits | CSE Class 2 Limits | Result | Result | Result | Result | Result | Result | Result |
|---|---|---|---|---|---|---|---|---|---|
| **Date** | | | | | | | | | |
| **Time** | | | | | | | | | |
| **Oxygen ($O_2$)** | ≥ 19.5 to ≤ 23.5% | ≥ 16% to 19.5% or > 23.5% | | | | | | | |
| **Lower Explosive Limit (LEL)** Flammability – General Work | ≤ 1% of LEL (HC) | < 10% of LEL (HC) | | | | | | | |
| Flammability – Hot Work/Critical Work – Spark Potential | 0% of LEL | 0% of LEL | | | | | | | |
| **Total Hydrocarbon Content (THC)** | < 500 ppm | < 1000 ppm (IDLH) | | | | | | | |
| **Hydrogen Sulphide ($H_2S$)** | < 5 ppm | < 100 ppm (IDLH) | | | | | | | |
| **Carbon Monoxide (CO)** | < 25 ppm | < 1200 ppm (IDLH) | | | | | | | |
| **Benzene** | < 0.5 ppm | < 500 ppm (IDLH) | | | | | | | |
| **Sulphur Dioxide ($SO_2$)** | < 0.5 ppm | < 100 ppm (IDLH) | | | | | | | |
| **Other** | | | | | | | | | |
| **Authorized Gas Tester (AGT) Initials:** | | | | | | | | | |

**Print name of the Authorized Gas Tester (AGT):** **Sign:**

**AGT Comments/Special Precautions:**

DocuSign Envelope ID: DBC83A32-C98A-4963-9E1E-44593247DA33

| Confined Space Entry - Personnel Log-In/Log-Out Sheet (Supplement) | | Date: |
|---|---|---|
| **Reason for Entry:** | | |
| **Name** | **Time In** | **Time Out** |
| | | |
| | | |
| | | |
| | | |
| | | |
| | | |
| | | |
| | | |
| | | |
| | | |
| | | |
| | | |
| | | |
| | | |
| | | |
| | | |
| | | |
| | | |
| | | |
| | | |
| | | |
| | | |
| | | |
| | | |
| | | |
| | | |
| | | |
| | | |
| | | |
| | | |
| | | |
| | | |
| | | |
| | | |
| | | |
| | | |
| | | |
| **Confined Space Entry Attendant** | **Name: (Print)** | |

## Work Team Declaration (Supplement):

Work group members must sign before commencing work for the first time to indicate that they have reviewed the Permit Pack with the Permit Holder. Each person understands the scope of work, their responsibilities and is competent to execute their part of the Permit Pack (including JSA, Procedures and Checklists) to complete the work safely.

If any person observes an unsafe situation developing they must immediately stop work, inform their co-workers, make the worksite safe, and inform the Permit Holder and the Area Operator.

| Date | Name | Sign On | Date (if different) | Sign Off |
|---|---|---|---|---|
| | | | | |
| | | | | |
| | | | | |
| | | | | |
| | | | | |
| | | | | |
| | | | | |
| | | | | |
| | | | | |
| | | | | |
| | | | | |
| | | | | |
| | | | | |
| | | | | |
| | | | | |
| | | | | |
| | | | | |
| | | | | |
| | | | | |
| | | | | |
| | | | | |
| | | | | |
| | | | | |
| | | | | |
| | | | | |
| | | | | |
| | | | | |
| | | | | |
| | | | | |
| | | | | |
| | | | | |
| | | | | |
| | | | | |
| | | | | |
| | | | | |

# Hot Work Permit

**Permit No:** _____

**Planned Date of Work:** _____ **Planned Start Time:** _____ **Validity Period:** _____

**Task Description:** _____

**Task Location:** _____

**Task Area:** _____

**Secondary Location:** _____

**Task Description Details:** _____

**Equipment ID/Tag Number:** _____

**Equipment Description:** _____

**Lead Discipline:** _____ **Number of People:** _____

**Isolations Required:** ☐ ICC ☐ RFIC ☐ Personal ☐ None

**Work Order Number:** _____

**Requested by:** _____ **Company:** _____

## Permit Pack Required Documents:

- ☐ Atmospheric Test Record
- ☐ Temporary Defeat
- ☐ Isolation Certificate
- ☒ JSA/THA
- ☐ Lifting Plan
- ☐ SDS
- ☐ P&ID/Drawing
- ☐ Normal Procedure
- ☐ IC Procedure
- ☐ Rescue Plan
- ☐ SWP Checklist
- ☐ SIMOP Deviation
- ☐ Work Aid

☐ List Required Checklists: _____

☐ Other (describe): _____

**Cross Referenced Certificates:**

| Type | Certificate/Permit Number(s) | |
|---|---|---|
| Isolation: | | |
| Temporary Defeat: | | |
| Work Permit(s): | | |
| | | |
| | | |

**Area Authority (AA) Reviewer:** The task description accurately details the permit work activity. The required permit pack documentation has been identified.

Print Name: _____ Signature: _____ Time/Date: _____

**Person In Charge (PIC):** I have endorsed this work and it will not conflict with other activities. It can commence when the permit conditions are fulfilled.

**RFO - PIC notified:** ☐ Yes _____ (Initial)

Print Name: _____ Signature: _____ Time/Date: _____

## Approval and Authority to Commence

☐ Remote site approval applies (PH signature required)

**Area Authority (AA):** I authorize this work permit and the work can proceed as planned.

Print Name: _____ Signature: _____ Time/Date: _____

**Area Operator (AO):** I have demonstrated zero energy to the Permit Holder (when required and not delegated). I believe it is safe to perform this work and the Permit Holder is aware of the equipment to be worked on.

**Zero Energy:** ☐ Not Required ☐ Demonstrated to the PH ☐ Delegated to the PH

**Note:** At times, the zero energy demonstration will be done with the assistance of other Isolating Authorities or delegated in the case of Personal Isolations or Remote Field Operations (RFO).

Print Name: _____ Signature: _____ Time/Date: _____

**Permit Holder (PH) Acceptance to Commence Work:** I understand the precautions that must be taken and Zero Energy (when required) has been demonstrated to me or delegated to me (Personal Isolations or RFO). The Permit Pack has been reviewed with the work team members and I will notify the Area Operator of the job status when work is completed/ceased. The procedures and checklists included in this Permit Pack are correct for the task and are current. Individuals who will be using these procedures and checklists are competent in their use.

Print Name: _____ Signature: _____ Time/Date: _____

**Area Interface Authority (AIA):** I have reviewed this work permit and the work can proceed as planned.

Print Name: _____ Signature: _____ Time/Date: _____

## Permit Shift Handover/Extension/Suspend/Reissue*

| Date/Time | Is this a Handover, Extension, Suspend, or Reissue? | Area Authority | Area Operator | Permit Holder | Area Interface Authority |
|---|---|---|---|---|---|
| | | | | | |
| | | | | | |
| | | | | | |
| | | | | | |
| | | | | | |
| | | | | | |
| | | | | | |
| | | | | | |
| | | | | | |
| | | | | | |
| | | | | | |
| | | | | | |

* 1. Any changes of AA, AO, PH, and AIA personnel on this permit must sign accepting their responsibility.
2. Shift extensions must be signed by the AA to a maximum of 4 hours.
3. Reissued permits must be signed each shift by the AA, AO, PH, and AIA.

## Permit Close-Out

**Work associated with this permit has been completed?** ☐ Yes ☐ No

**PH:** I confirm that all personnel have been accounted for and the worksite has been restored to a safe and tidy working condition.

Print Name: _____ Signature: _____ Time/Date: _____

**Work Status comments:** _____

**AO:** I am satisified that the worksite has been restored to a safe and tidy condition. All isolations relevant to this permit must follow the de-isolation procedure prior to reenergizing, or a long term isolation (LTI) must be applied.

**Have isolations been removed?** ☐ Yes ☐ No **PIC or the AA has been notified?** ☐ Yes ☐ No

Print Name: _____ Signature: _____ Time/Date: _____

DocuSign Envelope ID: DBC83A32-C98A-4963-9E1E-44593247DA33

## Work Management System Permit Pack Requirements Matrix

| Work/Job Activity | Permit Pack Requirements | | | | | |
|---|---|---|---|---|---|---|
| | Work Permit | Isolation • LO/TO • Blinding • Defeat | Job Safety Analysis | Safe Work Practice Checklist | Work ** Procedure | Atmospheric Test Record |
| Hot Work | M | R | M | M | R | M |

**M** Mandatory for permit pack

**R** To be reviewed and considered for permit pack by Permit Holder, Area Authority, and PIC.

**Where IC Procedure exist for the work activity they must be attached and available at the work site.

## Work Management System Atmospheric Test Record

**Area to be Tested:**

Continuous gas monitoring required: ☐ Yes ☐ No

**Test and Record Frequency:**

Prior to work commencing: ☐ Yes ☐ No

Every ________ Hour(s): ☐ Yes ☐ No

**Required Tests:**

☐ $O_2$ ☐ LEL ☐ $H_2S$ ☐ CO ☐ VOC ☐ Benzene ☐ $SO_2$ ☐ $CO_2$ ☐ Other ______________________________

Detector used: ______________________________ Calibration Date: ____________

**Comments/Special Precautions:**

**Results (Pre Start + Work Period Tests)**

| Check Local PU Limits | CSE Class 1 Limits | CSE Class 2 Limits | Pre-Start Test Result | Result | Result | Result | Result | Result | Result |
|---|---|---|---|---|---|---|---|---|---|
| Date | | | | | | | | | |
| Time | | | | | | | | | |
| Oxygen ($O_2$) | ≥ 19.5 to ≤ 23.5% | ≥ 16% to 19.5% or > 23.5% | | | | | | | |
| Lower Explosive Limit (LEL) Flammability – General Work | ≤ 1% of LEL (HC) | < 10% of LEL (HC) | | | | | | | |
| Flammability – Hot Work/Critical Work – Spark Potential | 0% of LEL | 0% of LEL | | | | | | | |
| Total Hydrocarbon Content (THC) | < 500 ppm | < 1000 ppm (IDLH) | | | | | | | |
| Hydrogen Sulphide ($H_2S$) | < 5 ppm | < 100 ppm (IDLH) | | | | | | | |
| Carbon Monoxide (CO) | < 25 ppm | < 1200 ppm (IDLH) | | | | | | | |
| Benzene | < 0.5 ppm | < 500 ppm (IDLH) | | | | | | | |
| Sulphur Dioxide ($SO_2$) | < 0.5 ppm | < 100 ppm (IDLH) | | | | | | | |
| Other | | | | | | | | | |
| Authorized Gas Tester (AGT) Initials: | | | | | | | | | |

**IMPORTANT:** Values can change periodically, check local Production Unit Class Limits or with Medical & Occupational Health (MOH)

## Work Team Declaration:

Work team members must sign before commencing work for the first time to indicate that they have reviewed the Permit Pack with the Permit Holder. Each person understands the scope of work, their responsibilities and is competent to execute their part of the Permit Pack (including JSA, Procedures, and Checklists) to complete the work safely.

If any person observes an unsafe situation developing they must immediately stop work, inform their co-workers, make the worksite safe, and inform the Permit Holder and the Area Operator.

**Note:** Workers reassigned, crew changing, or no longer working on this permit while the permit is valid must sign off.

| Date | Name | Sign On | Date (if different) | Sign Off |
|---|---|---|---|---|
| | | | | |
| | | | | |
| | | | | |
| | | | | |
| | | | | |
| | | | | |
| | | | | |
| | | | | |
| | | | | |
| | | | | |
| | | | | |
| | | | | |
| | | | | |
| | | | | |
| | | | | |
| | | | | |
| | | | | |
| | | | | |
| | | | | |
| | | | | |
| | | | | |
| | | | | |
| | | | | |
| | | | | |
| | | | | |
| | | | | |
| | | | | |
| | | | | |
| | | | | |
| | | | | |
| | | | | |
| | | | | |
| | | | | |
| | | | | |

DocuSign Envelope ID: DBC83A32-C98A-4963-9E1E-44593247DA33

# Confined Space Entry

**Permit No:** _____

**Planned Date of Work:** _____ **Planned Start Time:** _____ **Validity Period:** _____

**Task Description:** _____

**Task Location:** _____

**Task Area:** _____

**Secondary Location:** _____

**Task Description Details:** _____

**Equipment ID/Tag Number:** _____

**Equipment Description:** _____

**Lead Discipline:** _____ **Number of People:** _____

**Isolations Required:** ☐ ICC ☐ RFIC ☐ Personal ☐ None

**Work Order Number:** _____

**Requested by:** _____ **Company:** _____

## Permit Pack Required Documents:

- ☐ Atmospheric Test Record
- ☐ Temporary Defeat
- ☐ Isolation Certificate
- ☒ JSA/THA
- ☐ Lifting Plan
- ☐ SDS
- ☐ P&ID/Drawing
- ☐ Normal Procedure
- ☐ IC Procedure
- ☐ Rescue Plan
- ☐ SWP Checklist
- ☐ SIMOP Deviation
- ☐ Work Aid

☐ List Required Checklists: _____

☐ Other (describe): _____

**Cross Referenced Certificates:**

| Type | Certificate/Permit Number(s) | |
|---|---|---|
| Isolation: | | |
| Temporary Defeat: | | |
| Work Permit(s): | | |
| | | |
| | | |

**Area Authority (AA) Reviewer:** The task description accurately details the permit work activity. The required permit pack documentation has been identified.

Print Name: _____ Signature: _____ Time/Date: _____

**Person In Charge (PIC):** I have endorsed this work and it will not conflict with other activities. It can commence when the permit conditions are fulfilled. **RFO - PIC notified:** ☐ Yes _____ (Initial)

Print Name: _____ Signature: _____ Time/Date: _____

## Approval and Authority to Commence

☐ Remote site approval applies (PH signature required)

**Area Authority (AA):** I authorize this work permit and the work can proceed as planned.

Print Name: _____ Signature: _____ Time/Date: _____

**Area Operator (AO):** I have demonstrated zero energy to the Permit Holder (when required and not delegated). I believe it is safe to perform this work and the Permit Holder is aware of the equipment to be worked on.

**Zero Energy:** ☐ Not Required ☐ Demonstrated to the PH ☐ Delegated to the PH

**Note:** At times, the zero energy demonstration will be done with the assistance of other Isolating Authorities or delegated in the case of Personal Isolations or Remote Field Operations (RFO).

Print Name: _____ Signature: _____ Time/Date: _____

**Permit Holder (PH) Acceptance to Commence Work:** I understand the precautions that must be taken and Zero Energy (when required) has been demonstrated to me or delegated to me (Personal Isolations or RFO). The Permit Pack has been reviewed with the work team members and I will notify the Area Operator of the job status when work is completed/ceased. The procedures and checklists included in this Permit Pack are correct for the task and are current. Individuals who will be using these procedures and checklists are competent in their use.

Print Name: _____ Signature: _____ Time/Date: _____

**Area Interface Authority (AIA):** I have reviewed this work permit and the work can proceed as planned.

Print Name: _____ Signature: _____ Time/Date: _____

## Permit Shift Handover/Extension/Suspend/Reissue*

| Date/Time | Is this a Handover, Extension, Suspend, or Reissue? | Area Authority | Area Operator | Permit Holder | Area Interface Authority |
|---|---|---|---|---|---|
| | | | | | |
| | | | | | |
| | | | | | |
| | | | | | |
| | | | | | |
| | | | | | |
| | | | | | |
| | | | | | |
| | | | | | |
| | | | | | |
| | | | | | |
| | | | | | |

* 1. Any changes of AA, AO, PH, and AIA personnel on this permit must sign accepting their responsibility.
2. Shift extensions must be signed by the AA to a maximum of 4 hours.
3. Reissued permits must be signed each shift by the AA, AO, PH, and AIA.

## Permit Close-Out

**Work associated with this permit has been completed?** ☐ Yes ☐ No

**PH:** I confirm that all personnel have been accounted for and the worksite has been restored to a safe and tidy working condition.

Print Name: _____ Signature: _____ Time/Date: _____

**Work Status comments:** _____

**AO:** I am satisified that the worksite has been restored to a safe and tidy condition. All isolations relevant to this permit must follow the de-isolation procedure prior to reenergizing, or a long term isolation (LTI) must be applied.

**Have isolations been removed?** ☐ Yes ☐ No **PIC or the AA has been notified?** ☐ Yes ☐ No

Print Name: _____ Signature: _____ Time/Date: _____

## Work Management System Work Permit Requirements Matrix

| Work/Job Activity | Work Pack Requirements | | | | | |
|---|---|---|---|---|---|---|
| | Work Permit | Isolation • LO/TO • Blinding • Defeat | Job Safety Analysis | Safe Work Practice Checklist | Work ** Procedure | Atmospheric Test Record |
| Confined Space Entry | M | M* | M | M | R | M |

M — Mandatory for permit pack

R — To be reviewed and considered for permit pack by Permit Holder, Area Authority, and PIC.

*Isolation requirements may not be needed for certain entry types (such as excavation). Positive isolation required for all entries where hazardous energy exists.

**Where IC Procedure exist for the work activity they must be attached and available at the work site.

## Work Management System Atmospheric Test Record

**Area to be Tested:**

Continuous gas monitoring required: ☐ Yes ☐ No

**Test and Record Frequency:**

Prior to work commencing: ☐ Yes ☐ No

Every _____ Hour(s): ☐ Yes ☐ No

**Required Tests:**

☐ $O_2$ ☐ LEL ☐ $H_2S$ ☐ CO ☐ VOC ☐ Benzene ☐ $SO_2$ ☐ $CO_2$ ☐ Other _____

Detector used: _____ Calibration Date: _____

**Comments/Special Precautions:**

**Results (Pre Start + Work Period Tests)**

| Check Local PU Limits | CSE Class 1 Limits | CSE Class 2 Limits | Pre-Start Test Result | Result | Result | Result | Result | Result | Result |
|---|---|---|---|---|---|---|---|---|---|
| Date | | | | | | | | | |
| Time | | | | | | | | | |
| Oxygen ($O_2$) | ≥ 19.5 to ≤ 23.5% | ≥ 16% to 19.5% or > 23.5% | | | | | | | |
| Lower Explosive Limit (LEL) Flammability – General Work | ≤ 1% of LEL (HC) | < 10% of LEL (HC) | | | | | | | |
| Flammability – Hot Work/Critical Work – Spark Potential | 0% of LEL | 0% of LEL | | | | | | | |
| Total Hydrocarbon Content (THC) | < 500 ppm | < 1000 ppm (IDLH) | | | | | | | |
| Hydrogen Sulphide ($H_2S$) | < 5 ppm | < 100 ppm (IDLH) | | | | | | | |
| Carbon Monoxide (CO) | < 25 ppm | < 1200 ppm (IDLH) | | | | | | | |
| Benzene | < 0.5 ppm | < 500 ppm (IDLH) | | | | | | | |
| Sulphur Dioxide ($SO_2$) | < 0.5 ppm | < 100 ppm (IDLH) | | | | | | | |
| Other | | | | | | | | | |
| Authorized Gas Tester (AGT) Initials: | | | | | | | | | |

**IMPORTANT:** Values can change periodically, check local Production Unit Class Limits or with Medical & Occupational Health (MOH)

## Work Team Declaration:

Work team members must sign before commencing work for the first time to indicate that they have reviewed the Permit Pack with the Permit Holder. Each person understands the scope of work, their responsibilities and is competent to execute their part of the Permit Pack (including JSA, Procedures, and Checklists) to complete the work safely.

If any person observes an unsafe situation developing they must immediately stop work, inform their co-workers, make the worksite safe, and inform the Permit Holder and the Area Operator.

**Note:** Workers reassigned, crew changing, or no longer working on this permit while the permit is valid must sign off.

| Date | Name | Sign On | Date (if different) | Sign Off |
|---|---|---|---|---|
| | | | | |
| | | | | |
| | | | | |
| | | | | |
| | | | | |
| | | | | |
| | | | | |
| | | | | |
| | | | | |
| | | | | |
| | | | | |
| | | | | |
| | | | | |
| | | | | |

## Confined Space Entry - Personnel Log-In/Log-Out Sheet

| Name | Time In | Time Out |
|---|---|---|
| | | |
| | | |
| | | |
| | | |
| | | |
| | | |
| | | |
| | | |
| | | |
| | | |
| | | |
| | | |
| | | |
| | | |

**Confined Space Entry Attendant** **Name: (Print)**

DocuSign Envelope ID: DBC83A32-C98A-4963-9E1E-44593247DA33

# Critical Work Permit

**Permit No:** _____

- ☐ Abrasive Blasting
- ☐ Breaking Containment
- ☐ Critical Lift
- ☐ Diving Operations
- ☐ Excavation/Ground Disturbance
- ☐ High Risk Electrical
- ☐ Over-the-side Work
- ☐ Spark Potential
- ☐ Working on Pressurized Systems
- ☐ Working in Exposed Locations
- ☐ Work at Heights
- ☐ Other: _____

**Planned Date of Work:** _____ **Planned Start Time:** _____ **Validity Period:** _____

**Task Description:** _____

**Task Location:** _____

**Task Area:** _____

**Secondary Location:** _____

**Task Description Details:** _____

**Equipment ID/Tag Number:** _____

**Equipment Description:** _____

**Lead Discipline:** _____ **Number of People:** _____

**Isolations Required:** ☐ ICC ☐ RFIC ☐ Personal ☐ None

**Work Order Number:** _____

**Requested by:** _____ **Company:** _____

## Permit Pack Required Documents:

- ☐ Atmospheric Test Record
- ☐ Temporary Defeat
- ☐ Isolation Certificate
- ☒ JSA/THA
- ☐ Lifting Plan
- ☐ SDS
- ☐ P&ID/Drawing
- ☐ Normal Procedure
- ☐ IC Procedure
- ☐ Rescue Plan
- ☐ SWP Checklist
- ☐ SIMOP Deviation
- ☐ Work Aid

**Cross Referenced Certificates:**

| Type | Certificate/Permit Number(s) | |
|---|---|---|
| Isolation: | | |
| Temporary Defeat: | | |
| Work Permit(s): | | |
| | | |
| | | |

☐ List Required Checklists: _____

☐ Other (describe): _____

**Area Authority (AA) Reviewer:** The task description accurately details the permit work activity. The required permit pack documentation has been identified.

Print Name: _____ Signature: _____ Time/Date: _____

**Person In Charge (PIC):** I have endorsed this work and it will not conflict with other activities. It can commence when the permit conditions are fulfilled.

**RFO - PIC notified:** ☐ Yes _____ (Initial)

Print Name: _____ Signature: _____ Time/Date: _____

## Approval and Authority to Commence

☐ Remote site approval applies (PH signature required)

**Area Authority (AA):** I authorize this work permit and the work can proceed as planned.

Print Name: _____ Signature: _____ Time/Date: _____

**Area Operator (AO):** I have demonstrated zero energy to the Permit Holder (when required and not delegated). I believe it is safe to perform this work and the Permit Holder is aware of the equipment to be worked on.

**Zero Energy:** ☐ Not Required ☐ Demonstrated to the PH ☐ Delegated to the PH

**Note:** At times, the zero energy demonstration will be done with the assistance of other Isolating Authorities or delegated in the case of Personal Isolations or Remote Field Operations (RFO).

Print Name: _____ Signature: _____ Time/Date: _____

**Permit Holder (PH) Acceptance to Commence Work:** I understand the precautions that must be taken and Zero Energy (when required) has been demonstrated to me or delegated to me (Personal Isolations or RFO). The Permit Pack has been reviewed with the work team members and I will notify the Area Operator of the job status when work is completed/ceased. The procedures and checklists included in this Permit Pack are correct for the task and are current. Individuals who will be using these procedures and checklists are competent in their use.

Print Name: _____ Signature: _____ Time/Date: _____

**Area Interface Authority (AIA):** I have reviewed this work permit and the work can proceed as planned.

Print Name: _____ Signature: _____ Time/Date: _____

## Permit Shift Handover/Extension/Suspend/Reissue*

| Date/Time | Is this a Handover, Extension, Suspend, or Reissue? | Area Authority | Area Operator | Permit Holder | Area Interface Authority |
|---|---|---|---|---|---|
| | | | | | |
| | | | | | |
| | | | | | |
| | | | | | |
| | | | | | |
| | | | | | |
| | | | | | |
| | | | | | |
| | | | | | |
| | | | | | |
| | | | | | |

* 1. Any changes of AA, AO, PH, and AIA personnel on this permit must sign accepting their responsibility.
2. Shift extensions must be signed by the AA to a maximum of 4 hours.
3. Reissued permits must be signed each shift by the AA, AO, PH, and AIA.

## Permit Close-Out

**Work associated with this permit has been completed?** ☐ Yes ☐ No

**PH:** I confirm that all personnel have been accounted for and the worksite has been restored to a safe and tidy working condition.

Print Name: _____ Signature: _____ Time/Date: _____

**Work Status comments:** _____

**AO:** I am satisified that the worksite has been restored to a safe and tidy condition. All isolations relevant to this permit must follow the de-isolation procedure prior to reenergizing, or a long term isolation (LTI) must be applied.

**Have isolations been removed?** ☐ Yes ☐ No **PIC or the AA has been notified?** ☐ Yes ☐ No

Print Name: _____ Signature: _____ Time/Date: _____

DocuSign Envelope ID: DBC83A32-C98A-4963-9E1E-44593247DA33

## Work Management System Permit Pack Requirements Matrix

| Work/Job Activity | Permit Pack Requirements | | | | | |
|---|---|---|---|---|---|---|
| **M** Mandatory for Permit Pack<br>**R** To be reviewed and considered for Permit Pack by Permit Holder, Area Authority, and Issuing Authority. | **Work Permit** | **Isolation**<br>• LO/TO<br>• Blinding<br>• Defeat | **Job Safety Analysis** | **Safe Work Practice Checklist** | **Work ** Procedure** | **Atmospheric Test Record** |
| Breaking Containment | M | M | M | M | R | R |
| Critical Lift | M | R | M | M | R | R |
| Working at Heights | M | R | M | M | R | R |
| Diving Operations | M | R | M | M | R | R |
| Excavation/Ground Disturbance | M | R | M | M | R | R |
| High Risk Electrical | M | R | M | M | R | R |
| Abrasive Blasting | M | R | M | M | R | R |
| Spark Potential | M | R | M | R | R | M |
| Working on Pressurized Systems | M | R | M | R | R | R |
| Over-the-Side Work | M | R | M | R | R | R |
| Working in Exposed Locations | M | R | M | R | R | R |

**Where IC Procedure exist for the work activity they must be attached and available at the work site.

## Work Management System Atmospheric Test Record

**Area to be Tested:**

Continuous gas monitoring required: ☐ Yes ☐ No

**Test and Record Frequency:**

Prior to work commencing: ☐ Yes ☐ No

Every ________ Hour(s): ☐ Yes ☐ No

**Required Tests:**

☐ $O_2$ ☐ LEL ☐ $H_2S$ ☐ CO ☐ VOC ☐ Benzene ☐ $SO_2$ ☐ $CO_2$ ☐ Other ______________________________

Detector used: ______________________________ Calibration Date: ______________

**Comments/Special Precautions:**

**Results (Pre Start + Work Period Tests)**

| Check Local PU Limits | CSE Class 1 Limits | CSE Class 2 Limits | Pre-Start Test Result | Result | Result | Result | Result | Result | Result |
|---|---|---|---|---|---|---|---|---|---|
| **Date** | | | | | | | | | |
| **Time** | | | | | | | | | |
| **Oxygen ($O_2$)** | ≥ 19.5 to ≤ 23.5% | ≥ 16% to 19.5% or > 23.5% | | | | | | | |
| **Lower Explosive Limit (LEL)** Flammability – General Work | ≤ 1% of LEL (HC) | < 10% of LEL (HC) | | | | | | | |
| Flammability – Hot Work/Critical Work – Spark Potential | 0% of LEL | 0% of LEL | | | | | | | |
| **Total Hydrocarbon Content (THC)** | < 500 ppm | < 1000 ppm (IDLH) | | | | | | | |
| **Hydrogen Sulphide ($H_2S$)** | < 5 ppm | < 100 ppm (IDLH) | | | | | | | |
| **Carbon Monoxide (CO)** | < 25 ppm | < 1200 ppm (IDLH) | | | | | | | |
| **Benzene** | < 0.5 ppm | < 500 ppm (IDLH) | | | | | | | |
| **Sulphur Dioxide ($SO_2$)** | < 0.5 ppm | < 100 ppm (IDLH) | | | | | | | |
| **Other** | | | | | | | | | |
| **Authorized Gas Tester (AGT) Initials:** | | | | | | | | | |

**IMPORTANT:** Values can change periodically, check local Production Unit Class Limits or with Medical & Occupational Health (MOH)

## Work Team Declaration:

Work team members must sign before commencing work for the first time to indicate that they have reviewed the Permit Pack with the Permit Holder. Each person understands the scope of work, their responsibilities and is competent to execute their part of the Permit Pack (including JSA, Procedures, and Checklists) to complete the work safely.

If any person observes an unsafe situation developing they must immediately stop work, inform their co-workers, make the worksite safe, and inform the Permit Holder and the Area Operator.

**Note:** Workers reassigned, crew changing, or no longer working on this permit while the permit is valid must sign off.

| Date | Name | Sign On | Date (if different) | Sign Off |
|---|---|---|---|---|
| | | | | |
| | | | | |
| | | | | |
| | | | | |
| | | | | |
| | | | | |
| | | | | |
| | | | | |
| | | | | |
| | | | | |
| | | | | |
| | | | | |
| | | | | |
| | | | | |
| | | | | |
| | | | | |
| | | | | |
| | | | | |
| | | | | |
| | | | | |
| | | | | |
| | | | | |
| | | | | |
| | | | | |
| | | | | |
| | | | | |
| | | | | |
| | | | | |
| | | | | |
| | | | | |
| | | | | |
| | | | | |
| | | | | |
| | | | | |

DocuSign Envelope ID: DBC83A32-C98A-4963-9E1E-44593247DA33

# General Work Permit

**Permit No:** _____

**Planned Date of Work:** _____ **Planned Start Time:** _____ **Validity Period:** _____

**Task Description:** _____

**Task Location:** _____

**Task Area:** _____

**Secondary Location:** _____

**Task Description Details:** _____

**Equipment ID/Tag Number:** _____

**Equipment Description:** _____

**Lead Discipline:** _____ **Number of People:** _____

**Isolations Required:** ☐ ICC ☐ RFIC ☐ Personal ☐ None

**Work Order Number:** _____

**Requested by:** _____ **Company:** _____

## Permit Pack Required Documents:

- ☐ Atmospheric Test Record
- ☐ Temporary Defeat
- ☐ Isolation Certificate
- ☒ JSA/THA
- ☐ Lifting Plan
- ☐ SDS
- ☐ P&ID/Drawing
- ☐ Normal Procedure
- ☐ IC Procedure
- ☐ Rescue Plan
- ☐ SWP Checklist
- ☐ SIMOP Deviation
- ☐ Work Aid
- ☐ List Required Checklists: _____
- ☐ Other (describe): _____

## Cross Referenced Certificates:

| Type | Certificate/Permit Number(s) | |
|---|---|---|
| Isolation: | | |
| Temporary Defeat: | | |
| Work Permit(s): | | |
| | | |
| | | |

**Area Authority (AA) Reviewer:** The task description accurately details the permit work activity. The required permit pack documentation has been identified.

Print Name: _____ Signature: _____ Time/Date: _____

**Person In Charge (PIC):** I have endorsed this work and it will not conflict with other activities. It can commence when the permit conditions are fulfilled. **RFO - PIC notified:** ☐ Yes _____ (Initial)

Print Name: _____ Signature: _____ Time/Date: _____

## Approval and Authority to Commence

☐ Remote site approval applies (PH signature required)

**Area Authority (AA):** I authorize this work permit and the work can proceed as planned.

Print Name: _____ Signature: _____ Time/Date: _____

**Area Operator (AO):** I have demonstrated zero energy to the Permit Holder (when required and not delegated). I believe it is safe to perform this work and the Permit Holder is aware of the equipment to be worked on.

**Zero Energy:** ☐ Not Required ☐ Demonstrated to the PH ☐ Delegated to the PH

**Note:** At times, the zero energy demonstration will be done with the assistance of other Isolating Authorities or delegated in the case of Personal Isolations or Remote Field Operations (RFO).

Print Name: _____ Signature: _____ Time/Date: _____

**Permit Holder (PH) Acceptance to Commence Work:** I understand the precautions that must be taken and Zero Energy (when required) has been demonstrated to me or delegated to me (Personal Isolations or RFO). The Permit Pack has been reviewed with the work team members and I will notify the Area Operator of the job status when work is completed/ceased. The procedures and checklists included in this Permit Pack are correct for the task and are current. Individuals who will be using these procedures and checklists are competent in their use.

Print Name: _____ Signature: _____ Time/Date: _____

**Area Interface Authority (AIA):** I have reviewed this work permit and the work can proceed as planned.

Print Name: _____ Signature: _____ Time/Date: _____

## Permit Shift Handover/Extension/Suspend/Reissue*

| Date/Time | Is this a Handover, Extension, Suspend, or Reissue? | Area Authority | Area Operator | Permit Holder | Area Interface Authority |
|---|---|---|---|---|---|
| | | | | | |
| | | | | | |
| | | | | | |
| | | | | | |
| | | | | | |
| | | | | | |
| | | | | | |
| | | | | | |
| | | | | | |
| | | | | | |
| | | | | | |
| | | | | | |

* 1. Any changes of AA, AO, PH, and AIA personnel on this permit must sign accepting their responsibility.
2. Shift extensions must be signed by the AA to a maximum of 4 hours.
3. Reissued permits must be signed each shift by the AA, AO, PH, and AIA.

## Permit Close-Out

**Work associated with this permit has been completed?** ☐ Yes ☐ No

**PH:** I confirm that all personnel have been accounted for and the worksite has been restored to a safe and tidy working condition.

Print Name: _____ Signature: _____ Time/Date: _____

**Work Status comments:** _____

**AO:** I am satisified that the worksite has been restored to a safe and tidy condition. All isolations relevant to this permit must follow the de-isolation procedure prior to reenergizing, or a long term isolation (LTI) must be applied.

**Have isolations been removed?** ☐ Yes ☐ No **PIC or the AA has been notified?** ☐ Yes ☐ No

Print Name: _____ Signature: _____ Time/Date: _____

DocuSign Envelope ID: DBC83A32-C98A-4963-9E1E-44593247DA33

## Work Management System Permit Pack Requirements Matrix

| Work/Job Activity | Work Pack Requirements | | | | | |
|---|---|---|---|---|---|---|
| | Work Permit | Isolation<br>• LO/TO<br>• Blinding<br>• Defeat | Job Safety Analysis | Safe Work Practice Checklist | Work ** Procedure | Atmospheric Test Record |
| General Work Permit | M | R | M | R | R | R |

**M** Mandatory for permit pack

**R** To be reviewed and considered for permit pack by Permit Holder, Area Authority, and PIC.

**Where IC Procedure exist for the work activity they must be attached and available at the work site.

## Work Management System Atmospheric Test Record

**Area to be Tested:**

Continuous gas monitoring required: ☐ Yes ☐ No

**Test and Record Frequency:**

Prior to work commencing: ☐ Yes ☐ No

Every ________ Hour(s): ☐ Yes ☐ No

**Required Tests:**

☐ $O_2$ ☐ LEL ☐ $H_2S$ ☐ CO ☐ VOC ☐ Benzene ☐ $SO_2$ ☐ $CO_2$ ☐ Other ______________________________

Detector used: ______________________________ Calibration Date: ____________

**Comments/Special Precautions:**

**Results (Pre Start + Work Period Tests)**

| Check Local PU Limits | CSE Class 1 Limits | CSE Class 2 Limits | Pre-Start Test Result | Result | Result | Result | Result | Result | Result |
|---|---|---|---|---|---|---|---|---|---|
| Date | | | | | | | | | |
| Time | | | | | | | | | |
| Oxygen ($O_2$) | ≥ 19.5 to ≤ 23.5% | ≥ 16% to 19.5% or > 23.5% | | | | | | | |
| Lower Explosive Limit (LEL) Flammability – General Work | ≤ 1% of LEL (HC) | < 10% of LEL (HC) | | | | | | | |
| Flammability – Hot Work/Critical Work – Spark Potential | 0% of LEL | 0% of LEL | | | | | | | |
| Total Hydrocarbon Content (THC) | < 500 ppm | < 1000 ppm (IDLH) | | | | | | | |
| Hydrogen Sulphide ($H_2S$) | < 5 ppm | < 100 ppm (IDLH) | | | | | | | |
| Carbon Monoxide (CO) | < 25 ppm | < 1200 ppm (IDLH) | | | | | | | |
| Benzene | < 0.5 ppm | < 500 ppm (IDLH) | | | | | | | |
| Sulphur Dioxide ($SO_2$) | < 0.5 ppm | < 100 ppm (IDLH) | | | | | | | |
| Other | | | | | | | | | |
| Authorized Gas Tester (AGT) Initials: | | | | | | | | | |

**IMPORTANT:** Values can change periodically, check local Production Unit Class Limits or with Medical & Occupational Health (MOH)

## Work Team Declaration:

Work team members must sign before commencing work for the first time to indicate that they have reviewed the Permit Pack with the Permit Holder. Each person understands the scope of work, their responsibilities and is competent to execute their part of the Permit Pack (including JSA, Procedures, and Checklists) to complete the work safely.

If any person observes an unsafe situation developing they must immediately stop work, inform their co-workers, make the worksite safe, and inform the Permit Holder and the Area Operator.

**Note:** Workers reassigned, crew changing, or no longer working on this permit while the permit is valid must sign off.

| Date | Name | Sign On | Date (if different) | Sign Off |
|---|---|---|---|---|
| | | | | |
| | | | | |
| | | | | |
| | | | | |
| | | | | |
| | | | | |
| | | | | |
| | | | | |
| | | | | |
| | | | | |
| | | | | |
| | | | | |
| | | | | |
| | | | | |
| | | | | |
| | | | | |
| | | | | |
| | | | | |
| | | | | |
| | | | | |
| | | | | |
| | | | | |
| | | | | |
| | | | | |
| | | | | |
| | | | | |
| | | | | |
| | | | | |
| | | | | |
| | | | | |
| | | | | |
| | | | | |
| | | | | |
| | | | | |

DocuSign Envelope ID: DBC83A32-C98A-4963-9E1E-44593247DA33



# SAFE WORK PRACTICE – BREAKING CONTAINMENT

**Breaking Containment** describes the breaking or opening of the containment of energy and substances stored within systems such as hydrocarbons, chemicals, air, steam, fluids and gases. Examples include unbolting flanges and man-ways, removing screwed fittings on systems (pipes, vessels, exchangers, valves, turbines, compressors and pumps), opening enclosures such as pig launchers/receivers and filter housings, the opening of vents or drains, and the removal of orifice plates.

| ***This checklist is intended to supplement other PTW controls and a response is required for all items.*** | | |
|---|---|---|
| **Preparation (PH to complete at worksite prior to start of Job)** | *Yes* | *N/A* |
| Approved Permit Work Pack is available at site | | |
| All LSA Actions have been included & addressed | | |
| Equipment has been S/D, Drained and Depressurized | | |
| Equipment has been purged and HC Freed | | |
| Emergency alarm, emergency exits and shutdown stations in the area are identified | | |
| Energy Isolations have been performed, confirmed and zero energy demonstrated | | |
| Break points have been verified and confirmed | | |
| Area and equipment has been assessed for possible trapped liquids and/or gas | | |
| Atmospheric testing has been performed and results are satisfactory (Flammable & Toxic) | | |
| Area has been assessed for possible ignition sources including concurrent work activities | | |
| Area barricades and signs are in place at all access points | | |
| Shower and eyewash stations are identified and not obstructed | | |
| Spill Containment setup is in place to catch any liquids | | |
| Respiratory and Personal Protection is identified and available at the work site | | |
| Static grounds/bonds are in place | | |
| **Execution (PH to complete at commencement and / or during progress of work )** | | |
| Toolbox Talk has been conducted and personnel understand duties to perform work | | |
| Identified Potential ignition sources in the area have been controlled | | |
| Continuous atmospheric monitoring is in place | | |
| Respiratory and Personal protection is being worn | | |
| AO or designated competent person is at the first line break and will remain until safety & integrity of the isolations has been verified | | |
| Personnel not involved in the line break are positioned at a safe distance | | |
| Personnel opening the equipment are safely positioned | | |
| **Closeout (PH to complete at completion of the Job)** | | |
| Job activities have been completed as planned | | |
| All barricades and barriers associated with this task have been removed | | |
| Worksite has been restored to safe and tidy condition | | |
| Equipment has been deemed ready for return to service and Operations have been informed | | |
| Lessons Learned have been documented and shared | | |
| **Other** | | |
| | | |
| | | |

| **Location of Job:** | **Permit No.** |
|---|---|
| | **Date:** |

DocuSign Envelope ID: DBC83A32-C98A-4963-9E1E-44593247DA33



# SWP CHECKLIST – CRITICAL LIFT OPERATION

**Critical Lift:** ***For full requirements see Crane & Lifting Gear Manual)***: Personnel lifts (unless assessed and approved by the Operations Manager); non-routine lifts; lift that reach 80% of the crane's certified capacity or design operating limits; in proximity to live equipment, power lines, or temporary equipment;; hazardous materials; lifting through hatches; use of two or more cranes or lifting devices; lifting during SIMOPS activities; lifts with Bosun's chair or specially designed suspension harness.

| ***This checklist is intended to supplement other PTW controls and a response is required for all items.*** | | |
|---|---|---|
| **Preparation (PH to complete at worksite prior to start of Job)** | **YES** | **N/A** |
| Approved Permit Work Pack is available at site | | |
| All LSA Actions have been included & addressed | | |
| Lift scope and plan has been approved (i.e. weight, shape, center of gravity, blind or personnel lift) | | |
| SIMOPS conflicts have been reviewed at the daily work coordination meeting (e.g. helicopters) | | |
| A risk evaluation has been completed for the lift (JSA or Risk Assessment as appropriate) | | |
| Special precautions have been considered for the lifting route (e.g. lifting over restricted area) | | |
| A lift recovery path has been established (if the load needs to be returned to the pick-up area) | | |
| Operating radius determined and capacity adequate for the crane configuration | | |
| Special handling and/or special preparation is required for the lift (i.e. N2 tanks, acid tanks, explosives) | | |
| A specific procedure is required for this lift | | |
| Competent personnel and their roles identified (i.e. responsible person, rigger, slinger, signaler) | | |
| Lift plan, Clear Deck, and Hands Free Policy reviewed by those involved and a "Tool Box Talk" completed prior to start | | |
| Laydown area has been checked and assessed for structural strength | | |
| Lift area and pathway identified and controlled (e.g. people, power lines, derrick mast, flare tower) | | |
| Firm ground conditions verified for outriggers (mobile cranes) | | |
| Lift area has sufficient illumination | | |
| Weather and other environmental conditions have been reviewed | | |
| Communication methods have been identified □ Verbal □ Radio □ Hand signal | | |
| Crane and lifting equipment has been inspected, tested and certified as per regulatory requirements | | |
| Crane has been inspected using the daily checklist | | |
| All crane safety devices in normal operating mode | | |
| Lifting equipment and reeving of the crane has been inspected | | |
| Equipment is set up and positioned for the lift (e.g. outriggers are fully extended for mobile cranes) | | |
| Barriers and warnings signs in place | | |
| Hazards have been identified and mitigating controls are in place | | |
| **Execution (PH to complete at commencement and / or during progress of work task)** | | |
| Necessary personnel are at their location during the lifting operations | | |
| Confirm personnel are in safe positions for suspended loads | | |
| Communications have been established | | |
| **Closeout (PH to complete at completion of the Job)** | | |
| Crane configuration returned to normal operations | | |
| Lift area and pathway restored to normal operations | | |
| **Other** | | |
| | | |

| **Location of Job:** | **Permit No.** |
|---|---|
| | **Date:** |

DocuSign Envelope ID: DBC83A32-C98A-4963-9E1E-44593247DA33

ExxonMobil Production

# WORK MANAGEMENT SYSTEM

## SAFE WORK PRACTICE: WORKING AT HEIGHTS

PRODUCTION Best Practices

**Working At Height (WAH)** refers to: any work above 6 ft. (1.8 m) without guardrails; any work where there are any impaling hazards; working less than 6 ft. (1.8 m) from an unguarded edge; working on a roof with a grade more than 20% (1:5); working from a ladder above 6 ft. (1.8 m) or climbing a ladder above 20 ft. (6 m); working from a suspended scaffold; working over water.

| ***This checklist is intended to supplement other PTW controls and a response is required for all items.*** | | |
|---|---|---|
| **Preparation (PH to complete at worksite prior to start of Job)** | **YES** | **N/A** |
| Approved Permit Work Pack is available at site | | |
| All LSA Actions have been included & addressed | | |
| Confirm that all Personnel assigned to task have been trained and are competent in WAH | | |
| Confirm that Fall Protection Equipment (FPE), full Body Harness, Lanyards, hooks, SRL's rescue and supplementary equipment have been inspected, are certified and ready for use | | |
| Confirm that Standby/Safety Watch has been be assigned and aware of their roles and responsibility | | |
| Confirm that approved and best option anchor point have been identified and communicated to work crew | | |
| Confirm Buoyancy vest are available and in good condition for working over or near water. | | |
| Confirm that weather limits have been established (sea state, visibility, wind) to stop work where unsafe working limits are reached or where rescue capability would be impaired. | | |
| Confirm that a Standby vessel or Rescue Craft will be present/available during work over or near (meet local Regulatory Requirements) | | |
| Conform a Rescue plan is in place and response team are aware of activity addressing rescue from height/ | | |
| Confirm that Rescue at Height Equipment has been inspected, certified , accessible and ready for use | | |
| Signs and barriers have been placed under the work site to prevent people from entering the drop zone. | | |
| FPE is positioned such that at full extension it will prevent personnel from reaching an unguarded edge. | | |
| Confirm that Ladders have been inspected and are in good condition, and have suitable load ratings for the job. | | |
| Confirm that Ladder feet have secure footings and are placed one quarter of the working length of the ladder from the wall or other vertical support. Confirm that a second person is present to hold ladder until secured at the top. | | |
| **Execution (PH to complete at commencement and / or during progress of work task)** | | |
| Toolbox Talk has been conducted and personnel understand duties to perform work | | |
| Confirm that tools and equipment are secured / contained / barricaded to prevent objects from falling. | | |
| Confirm that personnel have inspected and are wearing and using FPE and that it fits correctly | | |
| Confirm that all ladders used to access an elevated location extends 3 ft (0.9 m) above the edge. | | |
| Confirm that personnel are aware to maintain three-point contact when ascending or descending ladders. | | |
| Confirm that approved anchor points are being used and 100% tie-off maintained | | |
| Confirm that a shoulder bag, tool belt, hand line, or hoist is being used to move tools and equipment up/down the ladder. | | |
| **Closeout (PH to complete at completion of the Job)** | | |
| Confirm that all Job activities have been completed as planned | | |
| Confirm All barricades and barriers associated with this task have been removed | | |
| Worksite has been restored to safe and tidy condition | | |
| Lessons Learned have been documented and shared | | |
| **Other** | | |
| | | |
| | | |

| **Location of Job:** | **Permit No.** |
|---|---|
| | **Date:** |

DocuSign Envelope ID: DBC83A32-C98A-4963-9E1E-44593247DA33



# SWP CHECKLIST – DIVING OPERATIONS

**Diving Operations** refers to underwater manned diving activity and related decompression/recompression facilities.

| *This checklist is intended to supplement other PTW controls and a response is required for all items.* | | |
|---|---|---|
| **Preparation (PH to complete at worksite prior to start of job)** | **YES** | **N/A** |
| Approved Permit Work Pack is available at site | | |
| All LSA Actions have been included & addressed | | |
| Confirm that a detailed diving plan is available and job scope defined and understood | | |
| Confirm that an ExxonMobil Diving Supervisor has been appointed and is present at Dive Site | | |
| Confirm that the EM Diving Supervisor has and will participate in daily work coordination meetings | | |
| Confirm that all divers are certified according to the Upstream Standard or as per local Regulations | | |
| Confirm that Emergency response plan and bridging documents has been developed & communicated | | |
| Confirm that inspection and maintenance records for the diving equipment are current and available | | |
| Confirm that all diving equipment certified by a recognized authority | | |
| Decompression chamber has been tested and available at diving site/location | | |
| Confirm that necessary back-up equipment identified, tested and readily available | | |
| Medical expertise available at diving site (medical technician/nurse) and onshore (diving doctor) | | |
| Confirm Communication equipment/methods (radio, telephone, other) have been tested and verified | | |
| Confirm that Logistics plan is established (helicopters, vessels ) and communication verfied with all vessels | | |
| Confirm that the position and safe distance to all vessels have been confirmed before divers go into the water | | |
| Confirm Safety zone (usually 500 meter)is established around diving site | | |
| Confirm that Crane operations are suspended near the diving site | | |
| Confirm that concurrent activities that might impact divers are suspended, including drilling and workover operations, overhead work conducted above dive site, and work involving tubular equipment (scaffolding, etc.) being handled within 50 meters above dive site | | |
| Confirm that Interfaces between diving team and operations have been established | | |
| Confirm that risks have been assessed and addressed regarding effects on divers from water intake suctions and surges at discharge points | | |
| Confirm that an Emergency drill has been conducted before first dive | | |
| **Execution (PH complete at commencement and / or during progress of work)** | | |
| Confirm that a Tool box meeting has been conducted,and that the Permit Pack and Emergency Response Plan is to be reviewed (daily) | | |
| Confirm that ExxonMobil Diving Supervisor is at location and all clear given to commence Dive | | |
| Weather forecast and criteria for stopping diving has been communicated and understood | | |
| Operations have been notified that divers are in the water | | |
| Diving logs are being maintained for all dives | | |
| **Closeout (PH to complete at the completion of the job)** | | |
| Diving Supervior has confirmed that work is complete and that Diving is over and all perons are out of the water and at a safe location | | |
| Worksite has been restored and clear of all equipment and materials | | |
| Confirm that Operations have been made aware of job completion and normal operations can resume | | |
| Lessons Learned have been documented and shared | | |
| **Other** | | |
| | | |
| | | |

| **Location of Job:** | **Permit No.** |
|---|---|
| | **Date:** |

DocuSign Envelope ID: DBC83A32-C98A-4963-9E1E-44593247DA33



# SWP CHECKLIST – EXCAVATION / GROUND DISTURBANCE

**Excavation/Ground Disturbance** refers to activities that penetrate the surface such as digging, drilling, removing the surface to form a cavity or depression, and other operations that may present a hazard.

| ***This checklist is intended to supplement other PTW controls and a response is required for all items.*** | | |
|---|---|---|
| **Preparation (PH to complete at worksite prior to start of task)** | Yes | N/A |
| Authorized Permit Work Pack is available at job site. | | |
| Verify all LSA's (Life Saving Actions identified and mitigations are in place and understood) | | |
| Barricades and lighting erected around the perimeter (unattended hole, overnight protection) | | |
| All affected companies and personnel have been notified | | |
| Emergency response process/procedures have been reviewed and shared with the work team. They are understood by everyone involved: phone numbers, radio channels, and muster areas identified | | |
| Work site has been inspected and all buried lines and cables identified and marked | | |
| Impacted third parties are notified prior to exposure of lines | | |
| All required tools, supplies and equipment are in good working condition and available at site | | |
| **Execution (PH to complete at commencement and / or during progress of work task)** | | |
| Spotter/Safety Watch is in position before work commences | | |
| Exposure of lines/cables is performed using non-destructive means (hand digging, air or hydro-vac.) | | |
| Confirm personnel are in safe position during activities | | |
| Verify all tools, equipment and supplies have been removed prior to backfilling | | |
| **Closeout (PH to complete before permit closeout)** | | |
| The area and all lines have been inspected and coatings cured prior to backfilling | | |
| All new pipes and cables installed or laid down have been reported for drawings update. | | |
| **Other** | | |
| | | |
| | | |
| | | |
| | | |

| **Location of Job:** | **Permit No.** |
|---|---|
| | **Date:** |

DocuSign Envelope ID: DBC83A32-C98A-4963-9E1E-44593247DA33



# SWP CHECKLIST – HIGH RISK ELECTRICAL

**High Risk Electrical Work** involves work on live electrical systems above Extra Low Voltage (ELV) levels. Extra Low Voltage circuits have a voltage not exceeding 50 Volts RMS A.C. or 120 Volts D.C. between conductors or earth. E.g. 24VDC instrument loops, CCTV, data networks etc. High Risk Electrical Work also includes activities with the potential (accidental or otherwise) for individuals to come into contact with energized electrical components of 300 volts or greater, or to be exposed to high temperatures or flashes resulting from electrical arcing or electrical fault conditions.

| ***This checklist is intended to supplement other PTW controls and a response is required for all items.*** | | |
|---|---|---|
| **Preparation (complete at worksite prior to start of task)** | **YES** | **N/A** |
| The isolation plan is appropriate for the work scope, is in place and has been verified | | |
| Zero energy has been demonstrated to the permit holder | | |
| Additional voltage sources (i.e. control circuits, relays, rectifiers, capacitors) have been identified | | |
| An approved rescue plan is in place | | |
| Standby/Safety Watch has been identified and is aware of their role | | |
| Emergency alarms, shutdown stations and emergency exits are identified and accessible | | |
| Workers are trained, competent, and qualified to perform the work | | |
| Electrical shock and flash hazard distances have been determined | | |
| Test equipment has been identified and checked for certification and condition, and is appropriate for the task | | |
| PPE checked for proper function and correct ratings (i.e. flash suit, insulated gloves, hot stick) | | |
| Shielding, barriers and warning signs have been erected | | |
| Grounding of the equipment has been completed | | |
| The control room has been notified | | |
| **Execution (complete at commencement and / or during progress of work task)** | | |
| Standby/rescue person(s) is in place and has full view of work task being performed | | |
| Limits of approach to live equipment/conductors are being adhered to | | |
| **Closeout (complete before permit closeout)** | | |
| Temporary grounding cables have been removed | | |
| De-isolation of equipment complete, verified and communicated | | |
| All tools and equipment have been removed | | |
| Shielding, barriers and warning signs have been removed | | |
| Electrical PPE has been cleaned, inspected and properly stored | | |
| Worksite has been restored to safe and tidy condition | | |
| Operations have been notified of the completion of the work | | |
| Lessons Learned have been documented and shared | | |
| **Other** | | |
| | | |
| | | |
| | | |
| | | |

| **Location of Job:** | **Permit No.** |
|---|---|
| | **Date:** |

DocuSign Envelope ID: DBC83A32-C98A-4963-9E1E-44593247DA33



# SWP CHECKLIST – ABRASIVE BLASTING

**Abrasive Blasting** involves the use of sand or grit for surface preparation including rust and paint removal.

| *This checklist is intended to supplement other PTW controls and a response is required for all items.* | | |
|---|---|---|
| **Preparation (PH to complete at worksite prior to start of task)** | **YES** | **N/A** |
| Approved Permit Work Pack is available at job site. | | |
| Verify all LSA's (Life Saving Actions identified and mitigations in place and understood) | | |
| Blasting equipment has been inspected and confirmed fit for purpose | | |
| Blasting equipment has been grounded/bonded | | |
| All hoses and fittings are equipped with whip checks and clips | | |
| Blasting equipment safety functions (i.e. dead man switch, PSV and pressure gauges) verified functioning | | |
| Equipment and devices have been protected from sand/grit damage or intrusion | | |
| Blast area containment curtains or tarps have been erected | | |
| Containment is in place for any potential spills caused by blasting and plugged drains | | |
| Erected barriers/signs cover all work area access points | | |
| AO confirmed the Blast area is clear of hydrocarbons and flammable substances | | |
| Eyes wash stations have been identified and checked for proper operation | | |
| Personnel impacted by sand/grit have been notified to wear required PPE | | |
| **Execution (PH to complete at commencement and / or during progress of work task)** | | |
| Equipment and device protection has been confirmed | | |
| Standby person has been assigned for task and is in position | | |
| Compressor equipment operator is in place to monitor conditions and ready to respond | | |
| Visible and audible alarms can be seen/heard in the area where blasting is ongoing | | |
| **Closeout (PH to complete before permit closeout)** | | |
| All equipment and materials have been removed from the work site | | |
| All equipment protection has been removed | | |
| Waste materials have been collected and disposed of correctly | | |
| Housekeeping completed and area inspected | | |
| **Other** | | |
| | | |
| | | |
| | | |
| | | |

| **Location of Job:** | **Permit No.** |
|---|---|
| | **Date:** |

DocuSign Envelope ID: DBC83A32-C98A-4963-9E1E-44593247DA33



# SWP CHECKLIST – HOT WORK

**Hot Work** refers to any open flame or spark throwing operations and includes: welding cutting, burning, use of open flame, grinding, gouging, brazing, stress relieving at temperatures above 400F (200 C), propane heating, the use of a de-burring tool, and any work activity generating sparks or slag that can be thrown out from the point of work.

| ***This checklist is intended to supplement other PTW controls and a response is required for all items.*** | | |
|---|---|---|
| **Preparation (PH to complete at worksite prior to start of Job)** | Yes | N/A |
| Approved Permit Work Pack is available at site | | |
| All LSA Actions have been included & addressed | | |
| Fire protection systems are available and functional | | |
| Temporary Defeats are in place (if required) | | |
| Flammable and combustible materials have been removed, purged, or at a safe distance | | |
| Hot Work barrier and controls have been implemented (e.g. habitat, shields, barriers) | | |
| Hot Work Hazardous fumes have been addressed (e.g. ventilation, extraction) | | |
| Gas cylinders are located in a safe location e.g. outside habitats, spark radius or confined spaces | | |
| Grounding (for welding or other portable equipment) is as close to the work area as possible | | |
| Fire Watch has been assigned and at the work site and is knowledgeable of the appropriate emergency response | | |
| Emergency alarms and shutdown stations in the area are identified and known by Fire Watch | | |
| Fire extinguishing equipment is at the work site | | |
| Open drains in the area plugged and filled with water or covered with flame retardant material. | | |
| Erected barriers/signs are in place to cover all work area and access points | | |
| Emergency escape routes are free of obstructions | | |
| Initial gas test has been conducted by AGT with 0% LEL result achieved and documented on the Permit Gas Test Record | | |
| **Execution (PH to complete at commencement and/or during progress of work)** | | |
| Toolbox Talk has been conducted and personnel understand duties to perform work | | |
| Final worksite check for concurrent work that may impact the Hot Work activity | | |
| Fire Watch is present at the work site and no other duties / responsibilities have been assigned | | |
| Continuous atmospheric monitoring is in place and person assigned to record periodic tests (e.g. breaks, meals, etc.) and documented on the permit Gas Test Record | | |
| Personal protection is being worn | | |
| **Closeout (PH to complete at completion of the Job)** | | |
| Work site has been monitored by Fire Watch for 30 minutes after work was complete | | |
| Job activities have been completed as planned | | |
| All equipment, barricades and barriers associated with this task have been removed | | |
| Worksite has been restored to safe and tidy condition | | |
| Operations have been notified of the completion of the work | | |
| Lessons Learned have been documented and shared | | |
| **Other** | | |
| | | |
| | | |

| **Location of Job:** | **Permit No.** |
|---|---|
| | **Date:** |

DocuSign Envelope ID: DBC83A32-C98A-4963-9E1E-44593247DA33



# SWP CHECKLIST – CONFINED SPACE ENTRY

**Confined space entry** occurs when the breathing zone of a worker breaks the plane of a confined space opening.

**NOTE- More stringent local regulations must be adhered to.**

| *This checklist is intended to supplement other PTW controls and a response is required for all items.* | | |
|---|---|---|
| **Preparation (PH to complete at worksite prior to start of job)** | ***Yes*** | ***NA*** |
| Approved Permit Work Pack is available at site | | |
| All LSA actions have been included & addressed | | |
| Positive isolation is in place and zero energy demonstrated | | |
| Confined Space Entry Classification (Class 1 or 2) has been determined and requirements identified | | |
| Safety and rescue equipment appropriate for the job and located at the CSE point | | |
| Rescue Team is available at the facility and has been advised of the entry plan | | |
| Confined space is ventilated to address the configuration of the space | | |
| Confined space atmosphere has been gas tested within 1 hour of entry (ventilation shutdown>30 minutes prior to test) and results are satisfactory. | | |
| CSE attendant is at the entry location(s) and controlling all entries | | |
| For external supplied air entries, an additional person is in attendance to monitor the air supply | | |
| Rescue Plan has been reviewed with the work and rescue team | | |
| **Execution (PH to complete at commencement and / or during the progress of work)** | | |
| Toolbox Talk has been conducted and personnel understand duties to perform work | | |
| Ventilation equipment is being monitored | | |
| Continuous atmospheric testing inside the confined space has been established | | |
| A CSE entry log-in/log-out is being maintained | | |
| CSE attendant is in communication with the entrants | | |
| **Closeout (PH to complete before permit closeout)** | | |
| Confirm all job activities have been completed as planned | | |
| Tools and equipment used within the confined space have been removed | | |
| Final inspection of the confined space has been completed prior to re-commissioning | | |
| Workers working within the confined space have exited and have been accounted for | | |
| Entry and exit points have been secured to prevent unauthorized entry | | |
| Rescue and emergency equipment has been removed from the worksite and properly stored | | |
| Lessons Learned have been documented and shared | | |
| **Other** | | |
| | | |
| | | |

| **Location of Job:** | **Permit No.** |
|---|---|
| | **Date:** |

DocuSign Envelope ID: DBC83A32-C98A-4963-9E1E-44593247DA33



# 4.0 Equipment Isolation and Reinstatement

## Overview

**Introduction**

This section provides guidance on the practices to be followed when isolating facility systems and equipment for maintenance or other activities, and subsequently reinstating them to their normal safe operating condition. It also describes the lock-out/tag-out (LOTO) process which is integral to the safe execution of work activities on process equipment.

This section also includes the Management of Temporary Defeat as it applies to work management and facility critical devices and systems.

**In this section**

This section contains the following information:

**4.1 Process Summary ..... 4-3**

**4.2 Safety ..... 4-5**

4.2.1 Risk Management ..... 4-6
4.2.2 Safety Precautions ..... 4-8

**4.3 Temporary Defeat of Critical Devices ..... 4-10**

4.3.1 Temporary Defeat Certificate ..... 4-16
4.3.2 Temporary Defeat Process ..... 4-17

**4.4 Energy Isolation Methods and Systems ..... 4-20**

4.4.1 Isolation Methods ..... 4-21
4.4.2 Isolation Integrity ..... 4-26
4.4.3 Valve Security ..... 4-33

**4.5 Isolating Systems and Equipment ..... 4-35**

4.5.1 Energy Isolation and Isolation Control Certificate ..... 4-36
4.5.2 Draining and Depressurizing ..... 4-51
4.5.3 Breaking Containment ..... 4-55
4.5.4 Blinding ..... 4-59
4.5.5 Hydrocarbon Freeing ..... 4-67
4.5.6 Cleaning ..... 4-80

**4.6 Reinstating Facility Systems and Equipment ..... 4-84**

4.6.1 Recommissioning ..... 4-86
4.6.2 Equipment Testing ..... 4-89
4.6.3 Leak and Pressure Testing ..... 4-91
4.6.4 Air Freeing ..... 4-101
4.6.5 Removing Energy Isolations ..... 4-110
4.6.6 Acceptance Testing ..... 4-113

**4.7 Tools ..... 4-114**

DocuSign Envelope ID: DBC83A32-C98A-4963-9E1E-44593247DA33



4.7.1 Temporary Defeat Certificate ..... 4-114
4.7.2 Isolation Control Certificate ..... 4-114
4.7.3 Functional Lock Removal Form ..... 4-114
4.7.4 Double Block and Bleed (DBB) Integrity Test ..... 4-114
4.7.5 Double Block Valve (DBV) Integrity Test ..... 4-114
4.7.6 Single Block Valve (SBV) Integrity Test ..... 4-114

**Figure 4-1** Temporary Defeat Process Flow ..... **4-17**
**Figure 4-2** Double Block and Bleed Isolation ..... **4-23**
**Figure 4-3** Double Block Valve Isolation ..... **4-24**
**Figure 4-4** Single Block Valve Isolation ..... **4-25**
**Figure 4-5** Isolation Locks ..... **4-29**
**Figure 4-6** Function Locks ..... **4-30**
**Figure 4-7** Isolation Process Flow ..... **4-37**
**Figure 4-8** Blinds ICC ..... **4-62**
**Figure 4-9** Hydrocarbon Freeing Decision Process ..... **4-71**
**Figure 4-10** Leak and Pressure Testing Decision Process ..... **4-95**
**Figure 4-11** Equipment Re-instatement Air Freeing Decision Tree ..... **4-103**

**Table 4-1** Approval Level for Temporary Defeats ..... **4-14**
**Table 4-2** Approval Level for Temporary Defeats ..... **4-15**
**Table 4-3** Temporary Defeat Process ..... **4-18**
**Table 4-4** Valve Security Levels ..... **4-33**
**Table 4-5** Energy Isolation Process ..... **4-38**
**Table 4-6** Multiple Isolation Points Locking Process ..... **4-46**
**Table 4-7** General Flushing Process ..... **4-72**
**Table 4-8** Purge by Dilution Process ..... **4-75**
**Table 4-9** Purge by Displacement Process ..... **4-76**
**Table 4-10** Steaming Process ..... **4-77**
**Table 4-11** Hot Water Circulation Process ..... **4-79**
**Table 4-12** Testing Process ..... **4-96**

DocuSign Envelope ID: DBC83A32-C98A-4963-9E1E-44593247DA33



# 4.1 Process Summary

**Introduction**

This section presents an overview of the approach to be taken when preparing equipment and systems for intrusive work and restoring these systems back to normal operating conditions.

**Purpose**

This section documents the practices that **must** be followed to enable the safe execution of activities on or in process equipment and ancillary systems and in particular:

- Safe isolation of equipment
- Establishing a zero energy condition
- Safe reinstatement of facilities to normal operating conditions

Adhering to these processes and practices enables the work to be conducted safely.

**Scope**

This isolation and reinstatement process is intended to manage the safety and environmental aspects of facility operating energy sources. Hazards associated with these energy sources **must** be managed at all times through the use of the Job Safety Analyses (JSAs), Isolation Control Certificates, Temporary Defeat Certificates, and Work Permits.

**System isolation and intrusive work**

**System:** A process system is a section of the facility that can include a number of equipment items, such as vessels, pumps, pipework, valves, and instrumentation.

A system to be isolated and prepared for maintenance or other activities:

- **Must** have appropriate locked and tagged (or appropriately identified) isolation points at all boundaries. The isolation points should be marked on a piping and instrumentation drawing (P&ID) or an electrical diagram.
- Should have adequate means to vent air or process gas from high points when filling the system with a liquid medium or inert gas.
- Should have adequate means for draining liquids, and a high point vent **must** be available to be opened to prevent a vacuum if draining after depressurizing.
- Should have adequate means to test and monitor the integrity of the isolation(s).

**Intrusive work:** Any activity that requires working on and/or the breaking of containment of any type of energy, such as mechanical, hydraulic, chemical, electrical, or thermal, and can include:

- Breaking open a flange to repair or replace equipment
- Removing a pipe spool or valve
- Entry into a process vessel (confined space entry)
- Shutting off power to rotating equipment
- Removing protection from electrically energized equipment

*Continued*

DocuSign Envelope ID: DBC83A32-C98A-4963-9E1E-44593247DA33



## Process Summary, Continued

**Isolation and reinstatement activities**

The following activities can be performed to isolate facility equipment and systems for maintenance, and to subsequently reinstate equipment and facilities to normal operating conditions safely:

- Isolation planning
- Temporary defeats
- Energy isolations
- Draining and depressurizing
- Breaking containment
- Blinding
- Hydrocarbon freeing
- Purging
- Cleaning
- Job closeout
- Equipment testing
- Air freeing
- Leak testing
- De-isolations
- Removing temporary defeats
- Acceptance testing
- Re-commissioning

DocuSign Envelope ID: DBC83A32-C98A-4963-9E1E-44593247DA33



# 4.2 Safety

**Introduction**

This section describes the risk management considerations that should be used when planning facility system isolation and reinstatement work, and some of the general safety precautions to be taken when executing this work.

DocuSign Envelope ID: DBC83A32-C98A-4963-9E1E-44593247DA33



## 4.2.1 Risk Management

**Introduction**

Risk management is the process of evaluating the level of risk (probability and consequence) associated with managing work activities such as isolating, reinstating, and conducting the scope of work. Potential hazards are identified and mitigation or preventative controls are implemented to reduce undesirable consequences to as low as reasonably practicable (ALARP). If the level of residual risk for the proposed scope of work is unacceptable, then the work scope or execution methods **must** be modified to reduce the risk to an acceptable level.

Various tools and methods are utilized to identify and control hazards such as:

- Last Minute Risk Assessment (LMRA)
- Job Safety Analysis (JSA)
- Risk Assessment when required

**Hazards**

Some potential hazards when isolating or reinstating facility systems are:

- Incorrectly performing mechanical or electrical isolations
- Incorrectly isolating control devices, including distributed control systems (DCS)
- Hazardous products or materials trapped or held-up in standpipes, weirs, loops, or low points
- Unexpected pressure while opening lines or vessels
- Hydrostatic pressure within tall vessels or vertical piping
- Sudden, unexpected liquid release caused by:
  - System cooling and causing vacuums, releasing liquids that are in pockets
  - Plugs (particularly solidified process materials or hydrates) moving

  ! **IMPORTANT:** All systems **must** be considered as having the potential to discharge hazardous liquid from the open ends of lines or broken flanges at any time, even after the system is drained and depressurized.
- Equipment becoming over-pressured due to thermal expansion of trapped liquids
- Chemical reactions between cleaning materials and a vessel or its contents
- Exposure to gaskets containing asbestos or other fibrous materials
- Incorrectly removing mechanical or electrical isolations
- Loss of pressure containment while pressure testing
- Use of off-spec parts, materials or equipment
- Failure to properly configure all valves and instrumentation
- Incorrectly reinstating control devices, including distributed control systems(DCS)

*Continued*

DocuSign Envelope ID: DBC83A32-C98A-4963-9E1E-44593247DA33



## Risk Management, Continued

**Consequences**

Potential consequences of incorrectly isolating or reinstating facility systems are:

- Loss of containment
- Hydrocarbon release to the atmosphere, which can be under pressure and cause:
  - Injury to personnel
  - Damage to the environment
  - Damage to the facility
- Fire or explosion
- Electrocution
- Personnel entering vessels that are not successfully hydrocarbon-freed can be exposed to a dangerous atmosphere

**Risk mitigation steps**

Potential risk mitigation steps for isolating or reinstating equipment are:

- Compliance with the requirements of this Global Work Management System
- Job-specific written procedures for isolating and reinstating activities
- Ensuring that personnel have the required competencies
- Conducting a quality Job Safety Analysis (JSA) or conducting a Risk Assessment when the Risk Screener considers it appropriate

  **Reference:** *Safety Management Manual*, "Risk Management" and the *Risk Assessment and Management Manual* (*RAM*)
- Compliance with QA/QC and positive material identification (PMI) processes to assure use of appropriately specified parts, materials and equipment
- Appropriate personal protective equipment (PPE)
- Standby personnel
- Restricted site access

DocuSign Envelope ID: DBC83A32-C98A-4963-9E1E-44593247DA33



## 4.2.2 Safety Precautions

**Introduction**

This section describes precautions to be taken during equipment isolating and reinstatement activities.

**Personal protective equipment (PPE)**

Although every effort **must** be made to depressurize and hydrocarbon-free the system before breaking containment, additional PPE **must** be worn until the effectiveness of the equipment preparation can be confirmed. In determining the additional PPE required, the JSA will consider the hazards that could be present (for example, fluid, gas, pressure, temperature, toxicity, and flammability). .

Additional PPE will address the potential hazards and can include goggles, face shield, respirators, or breathing apparatus. Personnel **must** be trained in the use of special protective equipment such as air-supplied respirators, self-contained breathing apparatus (SCBA), and respirators. Further information on this subject can be found in the *ExxonMobil Upstream Safety Manual*.

**Barricades and barriers**

The work permit and/or JSA should specify any barriers that will be erected before performing work and the activities that might present hazards to personnel in the area. The entire work area, as well as adjacent areas that could potentially be exposed, should be barricaded. The impact area due to potential residual inventory, pressure, or energy of the system and activities to be conducted is to be considered when placing barricades.

All personnel not directly involved with these activities are to remain outside the barricades. If they are required to be in the barricaded area, they **must** be protected by the same level of PPE as the people performing the work.

**Emergency response**

Before commencing work activities, personnel should familiarize themselves with escape routes and the location of safety equipment, such as call points, telephones, chemical showers, eye-wash stations, and other emergency equipment. Access to safety equipment and egress/escape routes shall be maintained at all times or alternate equipment and escape routes will be provided.

*Continued*

DocuSign Envelope ID: DBC83A32-C98A-4963-9E1E-44593247DA33



## Safety Precautions, Continued

**Standby Person**

During certain facility isolation and reinstatement activities (such as breaking containment, blinding, hydrocarbon freeing and leak testing), consideration should be made for designating a Standby Person.

! **IMPORTANT:** The main duty of the Standby Person is to monitor the activities, stop work if an unsafe condition develops, and alert the Area Authority (AA) of any incidents so that appropriate emergency teams can respond. The Standby Person **must not** enter the area if there is any potential for injury.

**Toxic substance exposure**

Personnel performing or observing activities involving hazardous or toxic substances **must** be instructed in emergency procedures/process. Personnel **must** seek immediate first aid if any hazardous or toxic substances come in contact with their eyes, skin, clothing, or shoes, or if they inhale a hazardous or toxic substance.

DocuSign Envelope ID: DBC83A32-C98A-4963-9E1E-44593247DA33



# 4.3 Temporary Defeat of Critical Devices

**Introduction**

This section describes the precautions that **must** be used to maintain safety for people, equipment, and the environment when critical devices are temporarily defeated.

Temporary defeats are an integral part of Permit to Work. They control the removal and reinstatement of the functionality of *critical protective devices*.

**Overview**

The process for temporarily defeating critical devices exist to allow the required work to be performed while maintaining acceptable levels of safety on the facilities.

The requirements for defeating critical devices should be identified during the Job Planning phase.

**Reference:** Section 2.1.1, "Work Planning"

*Continued*

DocuSign Envelope ID: DBC83A32-C98A-4963-9E1E-44593247DA33



## Temporary Defeat of Critical Devices, Continued

**Definitions**

**Temporary defeat:** Occurs when a critical device or a critical system is taken out of service (isolated or shut down) while the equipment or facility being protected remains in service.

**Critical devices:** Individual components, sections, or the whole of a critical system. Examples of critical devices are:

- A lifeboat, fast rescue craft, or escape craft
- A component or section of the fire main, fire door, fire wall penetrations
- A fire, gas, heat, or smoke detector
- Vibration monitors
- An emergency shutdown (ESD) activation point
- Public address (PA) systems (if part of a facility emergency response system)
- Critical Operating Parameters (COP) related alarms
- Critical alarms e.g. $H_2S$, LEL, fire, or abandon facility lights and horns
- Well surface and subsurface valves and controls
- Limit switches (for example, crane limits or drill rig crown saver)
- Pressure safety valves (PSVs) and rupture disks where no redundancy exists
- Critical process safety devices such as:
  - Level shutdown high-high (LSHH)
  - Level shutdown low-low (LSLL)
- Isolation valves on control or safety systems
- Car Seal Valves (e.g. PSVs, BDVs, Thermal)

**References:**

- Local Facilities Integrity Management System (FIMS) critical device list to ensure understanding of devices that could require a temporary defeat. Defeats include "A" Critical equipment per FIMS (SSHE Consequence 1 & 2).
- Alarm Management and Critical Operating Parameter, Production Best Practice for the expectations regarding the temporary suppression (defeat) of noncritical alarms.

*Continued*

DocuSign Envelope ID: DBC83A32-C98A-4963-9E1E-44593247DA33



## Temporary Defeat of Critical Devices, Continued

**Definitions**, continued

**Critical systems:** Systems required to protect personnel and equipment during normal and emergency situations. The following are examples of critical systems:

- Emergency shutdown (ESD) systems (such as sensors, valves, and controllers)
- Critical programmable logic controller (PLC) or DCS shutdowns per FIMS
- Fire and gas detection system or annunciator panels
- Well blowout preventers (BOPs) and their controls
- Well kick detection systems (such as pit alarms)
- Evacuation system
- Fire-fighting systems
- Public address systems (when part of the facility emergency response system)
- Communications systems (such as radios, telephones, and voice-powered phones)
  Note: Radio silence requires the use of a Temporary Defeat Certificate.
- Transportation aids (such as navigation lights and beacons, helideck and runway lights)
- Emergency power or uninterruptible power supply (UPS) on safety systems

**Purpose of Temporary Defeats**

The purpose of the temporary defeat process is to control the defeating and reinstatement of critical devices and to confirm that the following activities occur:

- Approvals are obtained prior to critical devices being isolated.
- Affected personnel are aware of the defeats.
- Only the required defeats are allowed.
- No other work is underway that requires the critical devices or systems to be operational (for example, fire-fighting systems cannot be isolated during hot work in the area).
- A THA is performed on the proposed temporary defeat.
- Alternative measures are put in place, when required, while critical devices or systems are defeated.
- Critical devices or systems are reinstated as soon as possible after the work.
- Personnel are prevented from starting machinery or equipment that could cause injury because critical devices are isolated.
- Temporary defeats of critical devices are documented to ensure that they are returned to service and not overlooked.

The Temporary Defeat Certificate is used to manage critical protective devices that are defeated on equipment that remains in service.

*Continued*

DocuSign Envelope ID: DBC83A32-C98A-4963-9E1E-44593247DA33



## Temporary Defeat of Critical Devices, Continued

**Temporary defeat planning**

When planning the temporary defeat of a critical device or system, the following should be considered:

- Critical protective devices that will be defeated.
- Existing TDs in the same area or on the facility.
- Equipment or systems that will be unprotected.
- Method by which the critical device will be defeated.
- Expected duration of the defeat(s).
- Completing the Temporary Defeat THA to identify the hazards and establishing alternative (mitigative or preventative) controls.
- Evaluation as to whether a situation could be created that results in the need for manual intervention.
- Level of approval required.

! **WARNING:** If an adequate level of protection cannot be provided and maintained, then the work requiring the temporary defeat(s) will be deferred or the protected equipment will be shut down for the duration of the defeat.

**Alternative controls**

Alternative (mitigative or preventative) controls that may be used during temporary defeating of critical devices include:

- Continuous surveillance by a competent person, such as:
  - Stationing personnel to overlook areas where fire, heat, or smoke detectors have been overridden.
  - Stationing personnel at hose reels or portable fire monitors while deluge branches are out of service.
- Closely monitoring process trends.
- Lowering throughput to lower the likelihood of upset conditions.
- Reliance on detectors in close proximity or provision of alternate portable detection devices.
- Implementing an interim directive as the result of creating a critical operating parameter (COP).

  Note: Although alternative controls may be in place, every attempt should be made to expedite the work requiring the temporary defeat.

*Continued*

DocuSign Envelope ID: DBC83A32-C98A-4963-9E1E-44593247DA33



## Temporary Defeat of Critical Devices, Continued

**Awareness**

Temporary defeats of critical devices or systems **must** be communicated to affected personnel, particularly when significant fire, gas detection, communication, or other protective systems are to be isolated. Site Management and Emergency Response Team(s) should be advised of temporary defeats of these systems.

**Trouble-shooting and function testing**

When troubleshooting or function testing, various defeats may need to be applied, such as hardwired bridges, disconnections, and software defeats. In this case, the specific defeats do not have to be itemized on the Temporary Defeat Certificate. However, the Temporary Defeat Certificate **must** cover the defeat of the system being worked on and reference the work order included in the Permit Pack.

The technician performing the troubleshooting or function testing should not leave the job while any defeats are in place unless the protected equipment is shut down or alternative controls are in place.

**Temporary defeat approval**

Temporary defeats of critical devices or systems **must** be approved by the Area Authority.

Higher management approval will be sought by the Area Authority if necessary due to the magnitude or duration of the proposed defeat.

When a system is to be defeated, a higher level of approval is required, depending on the risk and mitigation implemented, consistent with the risk matrix. For example:

Table 4-1 Approval Level for Temporary Defeats

| Approval Level | Temporary Defeat |
|---|---|
| Area Authority | Individual device(s), such as gas heads |
| Person In Charge | Section of plant or platform |
| Operations Superintendent | Large section of plant (train) or the whole platform |
| Operations Manager | Plant or several platforms |

*Continued*

DocuSign Envelope ID: DBC83A32-C98A-4963-9E1E-44593247DA33



## Temporary Defeat of Critical Devices, Continued

**Temporary defeat approval**, continued

The duration of the temporary defeat determines the level of management approval required.

Table 4-2 Approval Level for Temporary Defeats

| Position | Temporary Defeat Duration |
|---|---|
| Area Authority | End of shift (up to 12 hours) |
| Person In Charge (PIC) | 12 hours to 7 days |
| Operations Superintendent | 7 to 30 days |
| Operations Manager | > 30 days and every subsequent 30 days |

**Defeat Extension**

Temporary defeats that require extension will be approved by appropriate levels of management using the table above.

Temporary defeats extending beyond 60 days **must** be reviewed and risk assessed if necessary and the repair/resolution plan captured. The status of temporary defeats >30 days **must** be communicated to the Operations Manager (OM). Aging defeats **must** be stewarded at OM level every subsequent 30 days.

If a permanent change is to be introduced then the permanent MOC process will be followed and the new MOC number will be entered on the Temporary Defeat to capture that a permanent MOC is being progressed.

The Temporary Defeat will remain in place until the critical device is repaired, replaced, taken "out of service," or deemed noncritical by the MOC process and closed out.

**Shift or crew change**

Active temporary defeats of critical devices or systems **must** be a part of the written and verbal handover between shifts or crews.

**Reference:** Section 3.1.5, "Shift or crew interfaces and handover"

DocuSign Envelope ID: DBC83A32-C98A-4963-9E1E-44593247DA33



## 4.3.1 Temporary Defeat Certificate

**Introduction**

This topic presents the process and precautions to be followed when temporarily defeating a critical device or system.

**Temporary Defeat Certificate**

A Temporary Defeat Certificate **must** be used for isolation and shutdown of critical devices or systems protecting equipment that will remain in service (may become part of a Permit Pack).

> Note: A Temporary Defeat Certificate is not required for facility Start-Up for devices, equipment, or systems if specified in an approved Integrity Critical Procedures (or Integrity Critical Procedure Checklist). In these cases, a Temporary Defeat Certificate shall be processed if they are to remain in place.

Protective devices isolated on out-of-service equipment do not require a Temporary Defeat Certificate since their functionality is not required. Any protective devices isolated will be documented on the Isolation Control Certificate and reinstated as part of the re-commissioning.

> **Reference:** Section 4, "Tools," Temporary Defeat Certificate

The color of the Temporary Defeat Certificate is white with a purple frame. Each Temporary Defeat Certificate has a unique number that will be referenced on related work permits.

**Temporary defeat record**

All temporary defeats of critical devices or systems **must** be recorded and stewarded using ePTWS (a board or log can be used if ePTWS is not in place).

**Closing temporary defeats**

Temporary defeats should be closed as soon as possible after the work requiring the defeats is complete. This includes:

- Removing the isolation and restoring the functionality of the device(s). If the defeat was implemented because the device or system was faulty, the device or system will be tested to confirm its functionality following repair or replacement.
- Closing the Temporary Defeat Certificate.
- Removing the temporary defeat from the ongoing stewardship tool (board, log, or electronic system).

DocuSign Envelope ID: DBC83A32-C98A-4963-9E1E-44593247DA33



## 4.3.2 Temporary Defeat Process

**Temporary Defeat process**

The following table details each of the Temporary Defeat process flow phases, typical steps required at each phase, reference to the applicable sections of the permit(s), and the responsible person(s) required to execute the requirements at the specific phase.

Figure 4-1 Temporary Defeat Process Flow

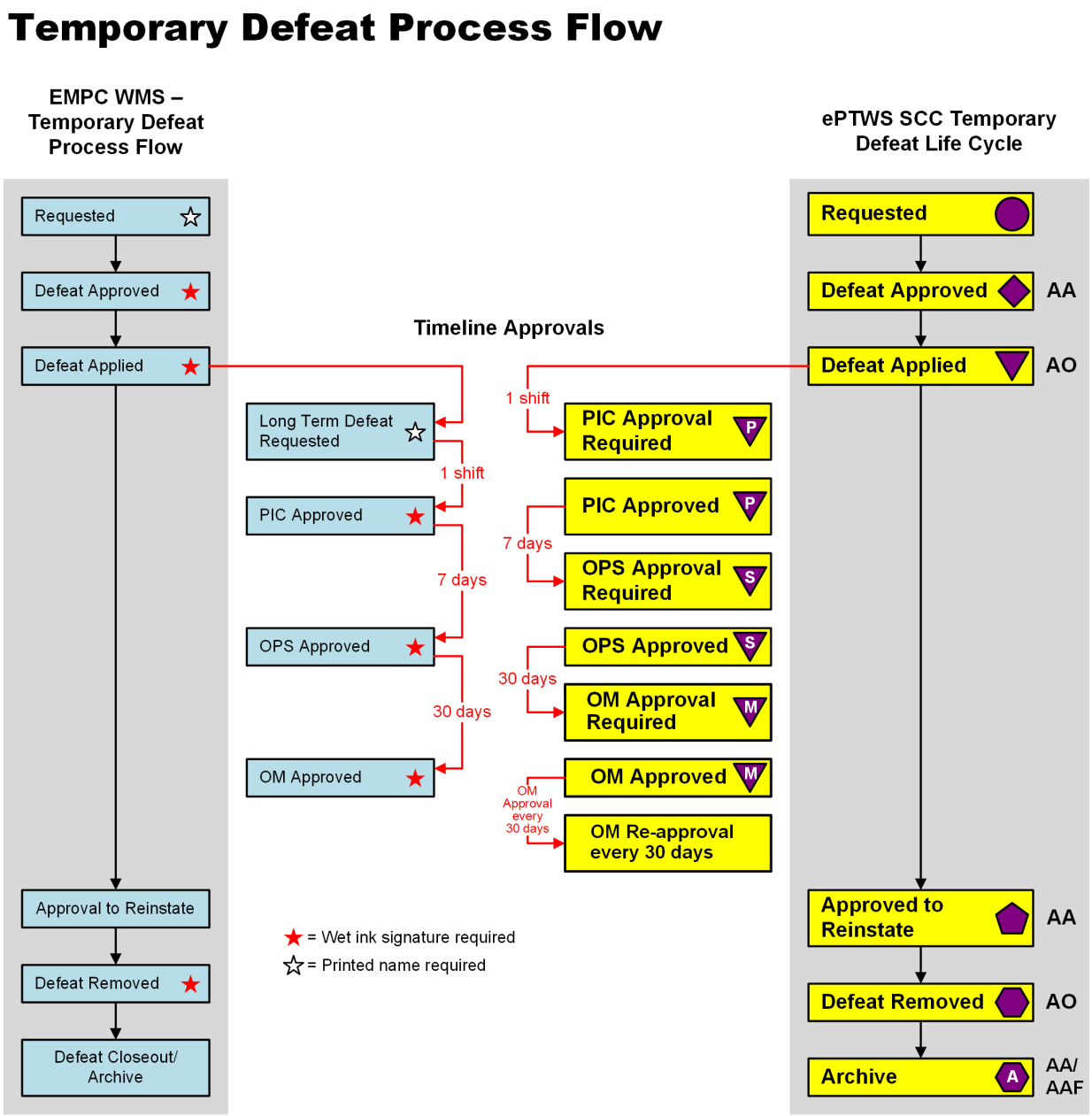


*Continued*

DocuSign Envelope ID: DBC83A32-C98A-4963-9E1E-44593247DA33



## Temporary Defeat Process, Continued

Table 4-3 Temporary Defeat Process

| Task | Activity |
|---|---|
| 1. | Plan and prepare a Temporary Defeat (TD) by completing a Temporary Defeat certificate, called a Supplementary Control Certificate (SCC) in ePTWS.<br>Review the local FIMS "Critical Devices" list to identify devices that may require a temporary defeat. Defeats are typically related to "A" Critical equipment per FIMS (SSHE Consequence 1 & 2).<br>For complex Temporary Defeats, review the appropriate drawings or diagrams to identify the required device to be defeated, inhibited, overridden, and/or bypassed. A copy of these marked-up diagrams should be attached to the Temporary Defeat.<br>When multiple devices are required to be defeated (for example, fire and gas preventive maintenance [PMs]), the AA can approve devices to be sequentially defeated per the work order. |
| 2. | The Requestor selects the TD category (Electrical, Mechanical, Safety, or Instrument/Process). |
| 3. | List the devices to be defeated, and the reason why the defeat is required, on the SCC. |
| 4. | If necessary (e.g. complexity, types of device and magnitude), consider performing Risk Assessment of the TD plan and provide details in the SCC. |
| 5. | The Requestor **must** indicate whether defeating the device will result in a critical operating parameter (COP). If yes, provide details in the SCC and have the Operations Manager approve the SCC. |
| 6. | If there is an approved device bypass procedure, attach the procedure to the External Document References of the SCC. |

*Continued*

DocuSign Envelope ID: DBC83A32-C98A-4963-9E1E-44593247DA33



## Temporary Defeat Process, Continued

Table 4-3 Temporary Defeat Process, continued

| Task | Activity |
|---|---|
| 7. | Complete a Temporary Defeat THA to identify the hazards and establish alternative (mitigative or preventative) controls. Identify specific hazards and define specific mitigation controls to be implemented during the defeat. |
| 8. | In the Cross-Reference Certificates section of the SCC, a permit can be cross-referenced or linked to the SCC. The permit can be "Issued" without the TD "In Place."<br>Prerequisite control should be used when a TD **must** be in place before the job commences (for example, to avoid a shutdown). The defeat can be added as a prerequisite control in the THA to prevent the permit from being issued until the defeat is "In Place." |
| 9. | Temporary defeat of critical devices or systems **must** be approved by the Area Authority up to the end of the shift. Higher management approval will be sought by the Area Authority, if necessary, due to the magnitude or duration of the proposed defeat. |
| 10. | Temporary defeats should be closed as soon as possible after the work requiring the defeats is complete. The Area Authority is required to approve reinstatement prior to the Area Operator removing the defeat. |
| 11. | The Area Authority or the Installation Administrator can move the TD to the Archive state. |

DocuSign Envelope ID: DBC83A32-C98A-4963-9E1E-44593247DA33



# 4.4 Energy Isolation Methods and Systems

**Introduction**

This section describes the methods and systems for energy isolation critical to the safe execution of work activities.

**Purpose**

The purpose of the energy isolation process is to enable work to proceed safely by:

- Ensuring correct isolation of all energy sources and removal of all hazardous substances or conditions when work is to be performed on equipment and facilities.
- Controlling the de-isolation process to ensure that equipment and facilities are not re-energized while work is ongoing.
- Controlling the reinstatement of equipment and facilities to ensure that all protective devices are functional and the integrity of the system (for example, flanges, vents, drains, and sample points) is restored.

This control is maintained by the use of Isolation Control Certificates (ICCs) and through Permit to Work (PTW) controls.

**Reference:** Section 4, "Tools," Isolation Control Certificate

**Isolation integrity retesting**

A retesting and reconfirmation of energy isolations by demonstrating zero energy **must** be performed at the following times:

- At each shift change before signing the permit.
- At the request of the work party.
- At the discretion of the Area Authority (AA) and Area Operator (AO).
- After any temporary discontinuation of energy isolation for testing (STT).

DocuSign Envelope ID: DBC83A32-C98A-4963-9E1E-44593247DA33



## 4.4.1 Isolation Methods

**Introduction**

This topic defines the various methods for isolating process equipment.

**Process isolation techniques**

The isolation and removal of all potential sources of pressurized fluids and gases from a vessel or section of piping will be achieved by:

- Closing and securing a series of valves.
- Opening vent lines, bleed points, or drains between the isolated valves in a safe and environmentally sound manner to drain and depressure the equipment.

**Positive isolation**

Positive isolation requires physical disconnection and blinding, and does not rely on valves or control systems.

Blinds, spades, plates, clamped flanges, or other terms are used to describe the devices used to positively segregate the energy, substances, and materials from the proposed activity. These devices **must** be rated for the design pressure of the system if they are part of the boundary isolations and could be exposed to system pressure.

The Isolating Authority (IA) **must** verify visually that all blinds or spades have been installed.

▲ **CAUTION:** Positive isolation **must** be achieved when confined space entry is required.

Positive isolation also includes electrical equipment whereby the power delivery pathway is interrupted by an air gap that is created by a removal of the power or signal conducting cables.

The Isolating Authority (IA) **must** verify visually that an air gap has been created.

**Approved Standard Isolation Methods**

The following are approved isolation methods:

- Blinding, spading or disconnection (Positive Isolation)
- Double block and bleed (DBB) isolations with all valves locked (or otherwise secured)
- Approved valves that are designed to provide double block and bleed (DBV)
- Single valve isolations (SBV) with additional mitigations

*Continued*

DocuSign Envelope ID: DBC83A32-C98A-4963-9E1E-44593247DA33



## Isolation Methods, Continued

**Actuated valves**

The following additional barriers are required for actuated valves such as emergency shutdown (ESD) valves, remotely operated valves (ROVs), or motor operated valves (MOVs):

- The power (hydraulic, pneumatic, or electric) supply **must** be isolated.
- Control fluid accumulators **must** be depressurized or disconnected when not required to maintain the isolated state of the valve.
- The control cabinet or power supply **must** be secured and locked.
- Control system isolation points **must** be appropriately tagged.
- Where possible, mechanical restrictions (lock-out caps) should be used on valves so equipped.

▲ **CAUTION:** Consider blocking in or disconnecting exhausts to the flare from gas-powered actuators so that they cannot be driven open by backflow from the flare header at times of high flaring and pressure buildup in the flare header.

**Special isolation techniques**

In instances where the facility/equipment design prevents an approved standard isolation method from being used, devices or methods such as mechanically expandable plugs, vented plugs, stopples, frozen plugs, pipe freeze or water seals can be used. Use of these isolation methods **must** be Risk Assessed and approved by the Operations Manager.

▲ **CAUTION:** There is a risk that these devices or materials (plugs, stopples, or frozen plugs) can be ejected and can only be used when there are no practical alternatives and a Risk Assessment has been conducted and endorsed by the Operations Manager. Personnel **must not** have any parts of their body in the potential ejection path (line-of-fire).

Vented plugs may be used for vapor or liquid seals in drained and depressurized systems to contain and direct any small amounts of residual vapor or liquid to a safe location. Gas detection **must** be used to continuously monitor for the presence of vapor that could create a hazard.

*Continued*

DocuSign Envelope ID: DBC83A32-C98A-4963-9E1E-44593247DA33



## Isolation Methods, Continued

**Double block and bleed isolation**

Double block and bleed (DBB) isolations are established by the closure of two block valves in series with an open bleed valve between them to eliminate the potential for pressure buildup between them, causing leakage through the closed valves to the work site.

Emergency shutdown (ESD) valves may be used for a DBB isolation, provided they can be reliably immobilized; for example, disconnecting the driver or power source.

The following figure shows the configuration of a DBB isolation.

Figure 4-2 Double Block and Bleed Isolation

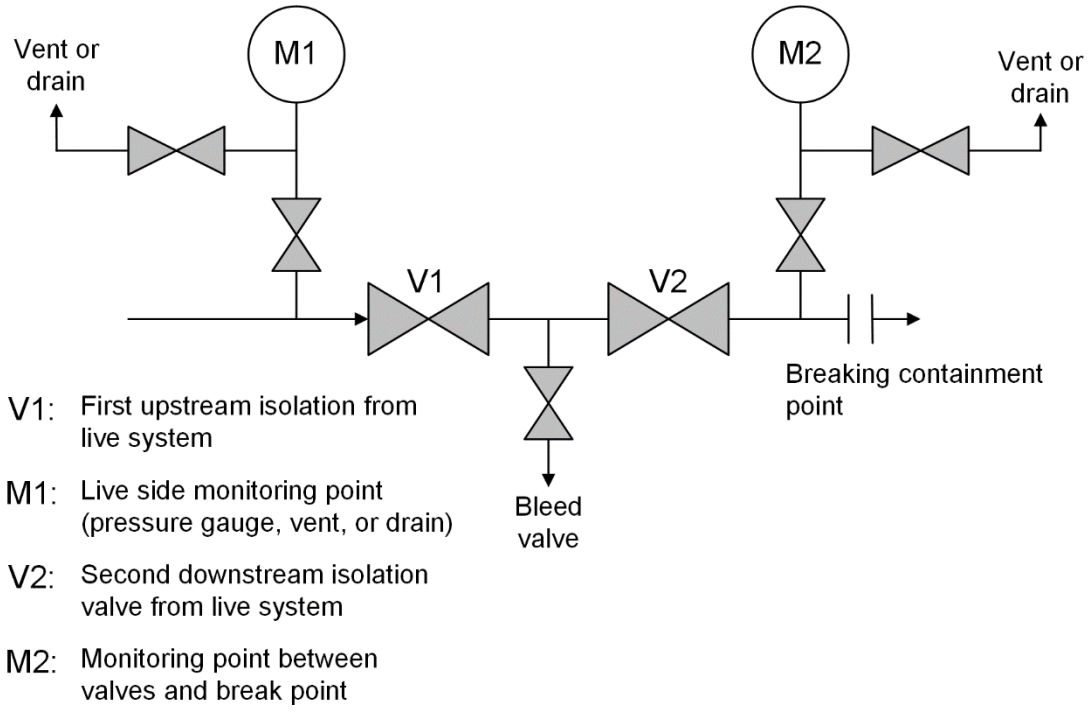


*Continued*

DocuSign Envelope ID: DBC83A32-C98A-4963-9E1E-44593247DA33



## Isolation Methods, Continued

**Double block valve isolation**

A double block valve (DBV) is a single valve with a double seal in a single body, with a cavity bleed between the seals. These provide an equivalent protection as a double block and bleed isolation. Examples of such valves are suitably specified as double wedge gate, parallel expanding gate, and double-seating ball valves.

Note: It is not always possible to perform a full integrity test, since the two seals cannot be tested independently.

▲ **CAUTION:** Some double block valves require line pressure to energize the upstream or downstream seals. These are not considered acceptable as DBVs by the Company and should be treated as single valves. Only DBVs with a dual positive seal or two separate valve elements, with a drainable cavity in between, are acceptable for DBV isolations.

▲ **CAUTION:** Valve cavity bleeds are not to be attempted if there is only a grease nipple fitting installed into the cavity bleed port without an isolation valve.

The figure below shows the configuration of a DBV isolation.

Figure 4-3 Double Block Valve Isolation

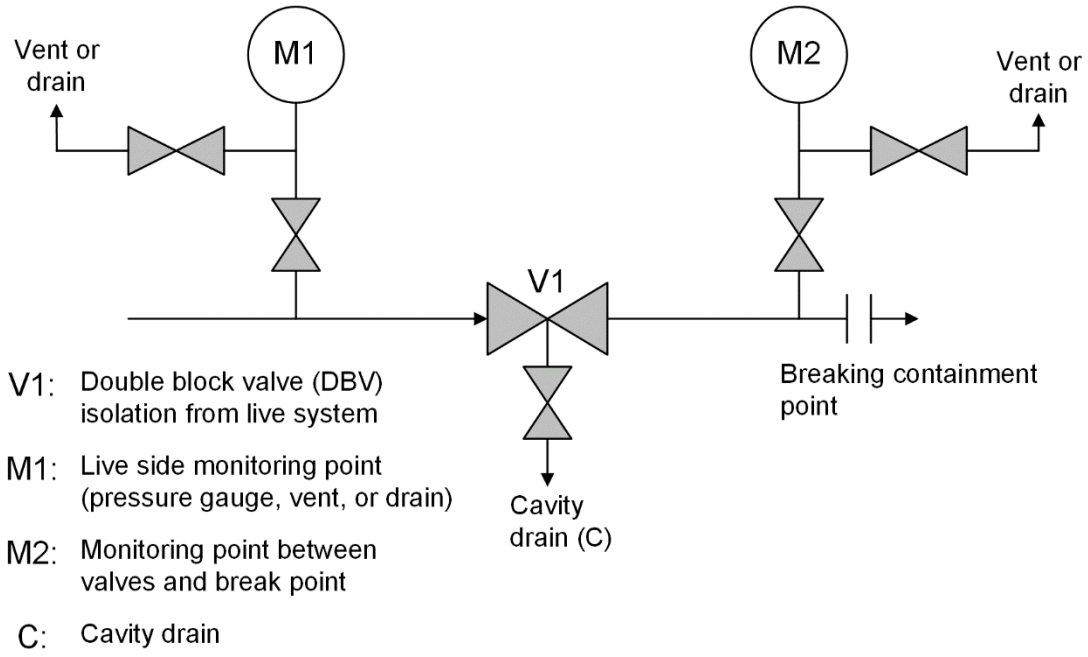


*Continued*

DocuSign Envelope ID: DBC83A32-C98A-4963-9E1E-44593247DA33



## Isolation Methods, Continued

**Single block valve isolation**

A single block valve (SBV) isolation consists of the closure of a single block valve. Any valve used for SBV isolation **must** provide a reliable seal and have additional mitigations implemented. Valve integrity **must** be confirmed by conducting a leak test (or approved flange breaking method) before commencing work.

Note: Non-return valves, flow control valves, and other valves that do not provide tight shutoff must not be used.

Note: Due to operational design it is not always possible to prove SBV integrity where there is no upstream pressure or there is not a downstream testing point. In these cases a Risk Assessment will be conducted, signed by the Operations Manager, and additional mitigations implemented (e.g. Drains, Flare Lines).

The figure below shows the configuration of a SBV isolation.

Figure 4-4 Single Block Valve Isolation

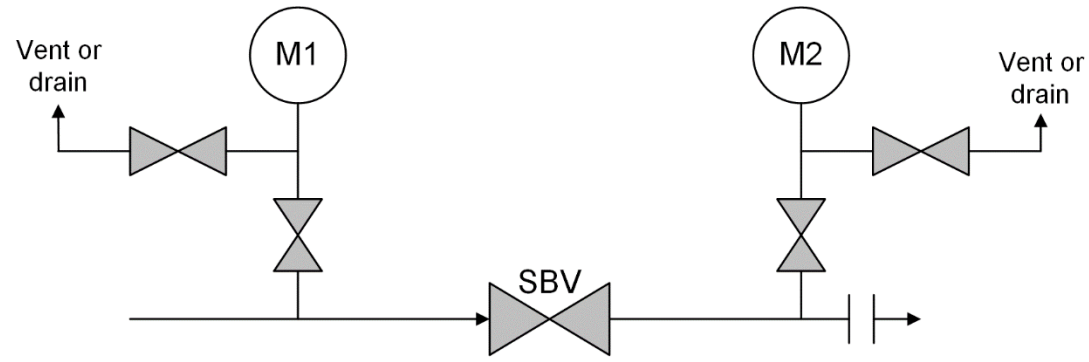

DocuSign Envelope ID: DBC83A32-C98A-4963-9E1E-44593247DA33



## 4.4.2 Isolation Integrity

**Introduction**

This topic defines the systems for executing and testing isolations.

**Isolation integrity system**

Positive isolation is regarded as the most secure method and **must** always be considered first when planning work. Positive isolation is mandatory for entry into a confined space and is recommended in the following situations.

- Long-term isolations (as defined by the Business Unit)
- When equipment is out-of-service for future utilization
- When equipment is to be abandoned in place (mothballed)
- When hot work is to be undertaken on isolated systems

The isolation methods described earlier in this section should be referred to when determining process isolations in situations where it is not reasonably practicable to achieve a positive isolation (excluding confined space entry, which requires positive isolation).

Practicality takes into account the exposure of breaking containment to conduct the job versus the exposure of breaking containment to install and remove blinds or spades before conducting the job and reinstating the equipment.

This system also identifies the mandatory safeguards that the Isolating Authority (IA) is responsible for implementing to manage risks.

**Lock-out/tag-out**

All isolations **must** achieve and maintain an effective containment of the relevant hazards. For process isolations, valves **must** be secured and locked in their required position to prevent unauthorized or inadvertent operation. Where valves are required to be locked (open or closed) as part of an isolation, only the following methods are acceptable:

- Lock and a securing method (metal/steel chains, metal/steel cable, lockable covers/fittings) that take a deliberate action to remove.
- Specially designed valve locking systems.
- Actuated valves that fail in the *isolation-safe* position (would not compromise the isolation) **must** have their control lines isolated and either locked in the vented position or physically disconnected, tagged, and recorded on the IC. Electrically actuated valves **must** have their control circuit electrically secured to ensure isolation.
- Actuated valves that fail in the *isolation-unsafe* position (would compromise the isolation) normally should not be used for isolation purposes. If no alternative is reasonably practicable, the valve **must** be reliably prevented from moving.
- For all isolation points, an isolation tag **must** be provided at each point with the relevant details.

*Continued*

DocuSign Envelope ID: DBC83A32-C98A-4963-9E1E-44593247DA33



## Isolation Integrity, Continued

**Lock sets**

Lock sets are used to isolate equipment using one or more sets (refer to Figure 4-5):

- Lock sets are keyed alike (one key opens all locks in the set). Lock sets can be small or large; for example, 5 or 100 locks for small and large isolations.
- Keys used for isolating the equipment are placed in the Isolation Control Point (ICP) box and secured using the uniquely keyed Functional locks.

**Functional locks**

Functional locks are applied as follows (refer to Figure 4-6):

- Functional locks are uniquely keyed and identifiable for each Function (for example, Mechanical, Electrical, Operations, Instrument, Contractor, other) by color, code, or type.
- Each group's Functional locks and keys **must** be kept in a secure box designated for this purpose. Each lock should have two keys; one key is kept in the cabinet and the other is issued with the lock. The Functional Supervisor for each group is responsible for issuing Functional locks and for keeping a log.
- Each Permit Holder performing work on isolated equipment **must** apply their Functional lock to the ICP before signing acceptance of the permit.
- Provision **must** be allowed for the application of personal locks by work team members upon request or where required by regulation.

  **Reference:** Multiple Isolation Point Locking Process, page 4-47

*Continued*

DocuSign Envelope ID: DBC83A32-C98A-4963-9E1E-44593247DA33



## Isolation Integrity, Continued

**Tagging**

All isolations **must** be accompanied by an Isolation Tag to align with the Isolation Control Certificate.

Tags should also be used to identify:

- Equipment that is out of service, or faulty and requires repair.
- Open bleeds, vents, sample valves, or removed plugs that need to be highlighted and recorded on the Isolation Control Certificate so that their reinstatement is not overlooked.
- Blinds, spades, skillets, and other mechanical isolating devices.

The following information should be printed legibly on Isolation Tags.

- Isolation point number (for example, from P&ID or electrical diagrams)
- Isolation Control Certificate number
- Isolated state
- Work permit number (if applicable)
- Person performing isolation

The Isolation Control Certificate (paper or electronic) will maintain a list of all locked and/or tagged points to serve as a record and a checklist when reinstating equipment. Tags **must** remain in place until the tagged isolation point is safely restored to its normal operating position. The Isolating Authority who removes the locks should also remove the corresponding tags.

*Continued*

DocuSign Envelope ID: DBC83A32-C98A-4963-9E1E-44593247DA33



# Isolation Integrity, Continued

## Lock-out, tag-out process

Figure 4-5 Isolation Locks

### Isolation Locks:

**Use:**
- To lock each isolation point in a safe state in preparation for work.
- Locks will be used for all isolation points where a lock can be applied.
- Exceptions may include atmospheric bleeds, vents, or drains within the boundary isolations.

**Features:**
- Should be identifiable through use of a common colour (or natural finish)
- Lock-sets will be available from designated locations.
- Each Lock-set contains a group of keyed-alike locks.
- Lock-sets are available in 5, 10, 20, or 50 locks for different complexity isolations.
- A single key will be provided with each Lock-set. A spare key for each Lock-set or a master key, will be held by functional supervisors in a secure place.
- Each Lock-set and associated key will be identified by a unique number (refer to example below).
- Lock-sets should only be issued to Isolating Authorities (IAs).
- Locks from a Lock-set may be used to secure a number of separate ICPs, already in place, and whose existing isolations will also be required for the proposed new work.

**Lock-set**:

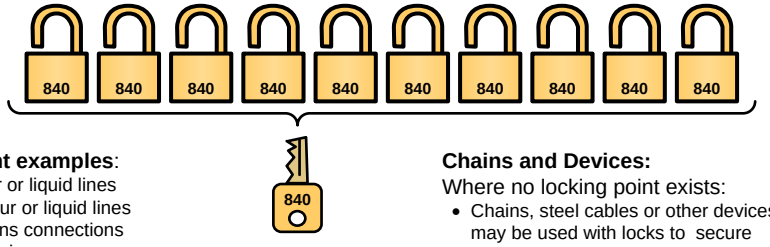


**Isolation point examples**:
1. Inlet vapour or liquid lines
2. Outlet vapour or liquid lines
3. Closed drains connections
4. Small bore pipes
5. Analyser lines
6. Flare lines
7. PSVs
8. Electrical supply
9. ON/OFF Switches
10. Atmospheric bleeds

**Isolation Tags:**

**Tags will be attached to:**
- Each Isolation Lock
- Vent or bleed points

**Chains and Devices:**
Where no locking point exists:
- Chains, steel cables or other devices may be used with locks to secure isolations.
- Where these methods are found to be unsatisfactory, the isolation must be secured in such a fashion that it cannot be inadvertently removed. There are many devices available (covers, brackets, and fasteners).

Select a location to place the Isolation Control Point (ICP).

*Can be at the job site or central locations where ICPs are stored or mounted.*

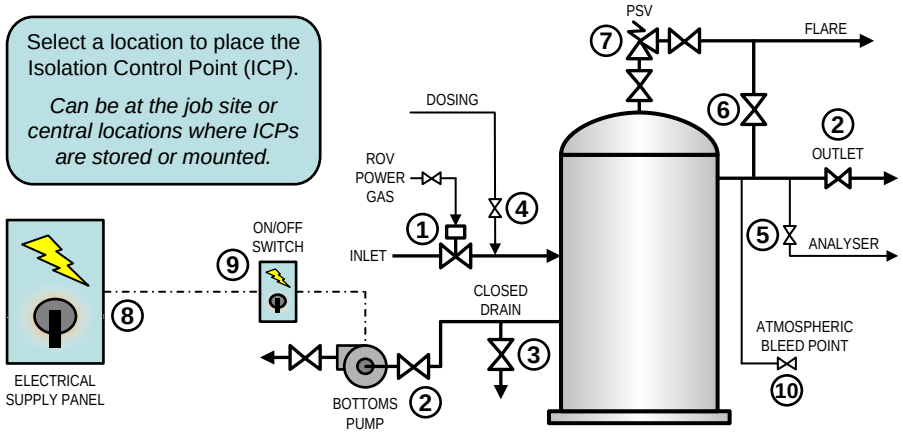


*Continued*

DocuSign Envelope ID: DBC83A32-C98A-4963-9E1E-44593247DA33



# Isolation Integrity, Continued

## Lock-out, tag-out process, continued

Figure 4-6 Function Locks

### Function Locks:

**Use:**
- To secure the Isolation Control Point (ICP) and ensure workgroup control over the isolations.
- To identify, by color coding, which workgroup functions(s) is/are involved.

**Features:**
- Will be identifiable through use of color coding matched to specific workgroup functions, such as Operators, Electricians, Instrument Technicians, Mechanics, and others such as contractors.
- Available individually from designated points of issue.
- Each lock is uniquely keyed and a single key will be issued with each lock. A spare key for each lock or a master key will be held by functional supervisors in a secure place.
- Each lock and associated key will be marked with a unique identification number.

**Variation 1 Area Operator – Own Isolations (personal lockouts):**
- Operators may use several Operator Function Locks to lock out equipment for their own work and retain the keys in their possession. Alternatively, they can use a keyed-alike lock-set and keep the key in their possession.
- **Other workgroups must NEVER rely on these isolations alone to conduct their own work.**

**Variation 2 Remote Locations – Own Isolations (personal lockouts):**
- Maintenance Technicians or contractors may use several Function Locks to lock out equipment for their own work and retain the keys in their possession. Alternatively, they can use a keyed-alike lock-set and keep the key in their possession.
- **Other workgroups must NEVER rely on these isolations alone to conduct their own work.**

**Function Locks:**
Colors can be determined by the PU but should be distinguishable from the keyed-alike isolation lock-sets. For example:
- Operators (blue)
- Electricians (green)
- Instrument Techs (purple)
- Mechanics (orange)
- Other, such as Contrators (grey)

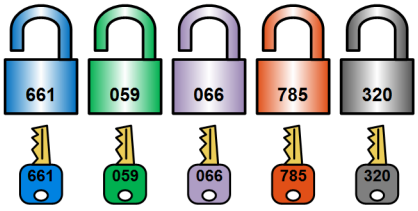


**Isolation Control Point – example:**
Isolation Control Bag/Box has an unique number and may be secured:
- To an Isolation Point
- To a nearby structure
- Within a control room
- Other designated location

**Identification Tags should be attached to each Function Lock:**
Use of a tag may be waived only on designated Remote Low Complexity sites where the work is undertaken by the same person who has placed the isolations, or their successor.

Example shows an Isolation Control Point (ICP), used to capture the Isolation Lock-set key(s), that is first secured shut by an Operators Function Lock (blue in the example).

Additional Function Locks securing the ICP indicate that two permitted jobs are relying on these isolations: one "Electrical" workgroup (green) and one "Mechanical" workgroup (orange). Lock colors are selected by the PU, but should be different for the various functions.

Relevant documentation for each job is documented on a tag attached to each Function Lock.

*Continued*

DocuSign Envelope ID: DBC83A32-C98A-4963-9E1E-44593247DA33



## Isolation Integrity, Continued

**Risk Assessment of noncompliant isolations**

In the event that isolations compliant with the requirements of this Global Work Management System cannot be achieved, a Risk Assessment should be conducted. Consult a Risk Screener to establish the appropriate type of Risk Assessment to be conducted (for example, Structured Risk Assessment). Risk elimination or mitigation measures identified in the Risk Assessment **must** be implemented.

**Process isolation integrity tests**

After the locking devices are installed, the Area Operator **must** test the integrity of the lock-out (for example, attempt to turn the valve handle or close the circuit breaker to prove the lock-out effectively prevents movement).

All process isolations should be tested and shown to be effective before containment is broken. For more complex isolations, a job specific isolation procedure may be required, specifying the methods by which the isolations will be verified and how zero energy will be demonstrated.

▲ **CAUTION:** A reasonable time period (pipework and valves should reach ambient temperature) should be allowed to confirm the integrity of any isolation before stating that the isolation has been proven.

Valve isolation integrity tests are described in Section 4.7, "Tools." It is important that all bleeds (vents and drains) are checked and free from obstruction prior to performing any tests.

**Reference:** Section 4, "Tools" for:

- Double Block and Bleed (DBB) Isolation Integrity Test
- Double Block Valve (DBV) Isolation Integrity Test
- Single Block Valve (SBV) Isolation Integrity Test

*Continued*

DocuSign Envelope ID: DBC83A32-C98A-4963-9E1E-44593247DA33



## Isolation Integrity, Continued

**Process isolation integrity tests,** continued

After completing integrity testing of isolations, the bleed valve should normally be left in the open position and unlocked to enable regular monitoring. The vent may need to be directed to a safe location using a secured temporary hose or tubing. A pressure gauge should be available to monitor for any pressure buildup from leaking valves.

If zero energy is not achievable when checking the integrity of valve isolation, attention should be given to:

- Checking all valves for tight shutoff
- Closing additional isolation valves
- Providing positive isolation

If "zero energy" is still not achieved, a Risk Assessment should be conducted to determine whether it is acceptable to proceed. The Risk Assessment should consider:

- The nature of the fluids and gases
- The pressure and inventory of the process fluids and gases
- The anticipated length of time the isolation will be required
- The job to be performed
- Potential mitigation measures, including:
  - Acceptability of any leak rates
  - Standby Person to monitor the isolation and take appropriate action if the leak rate becomes unacceptable
  - Bunding or containment
  - Toxicity, impact on personnel, and required PPE

    **Reference:** The "Confined Space Entry" section of this manual lists the acceptable toxicity levels.

  - The use of blinds or plugs

! **WARNING:** There may be certain instances where demonstrating zero energy to the Permit Holder is impractical (for example, diving operations or remote field isolations). Verbal communication can be used in these cases, providing that PIC approval has been obtained.

! **WARNING:** When considering the use of blinds or plugs to contain fluids or vapors from leaking valves, the provision for depressurizing and draining before removal of the blind or plug **must** be included. Note that the exposure time to install and remove blinds can, at times, present a higher risk than conducting a short duration job with mitigations in place.

DocuSign Envelope ID: DBC83A32-C98A-4963-9E1E-44593247DA33



## 4.4.3 Valve Security

**Introduction**

The correct position of valves in the process system is critical to efficient and safe operation of the facility. In many cases, the correct position of fully open or fully closed valves is also critical to the integrity of the facility. Steps **must** be taken to help confirm that critical valves are not inadvertently moved from their normal operating state without the proper administrative controls.

**Valve security levels**

The appropriate position for fully open and fully closed valves is normally shown on the P&IDs for the facility. They are usually one of the following:

Table 4-4 Valve Security Levels

| Valve Position | Security and Allowed Operator Actions |
|---|---|
| Normally open (NO) | The valve is unsecured and the Area Operator or designate may temporarily close the valve as part of their normal operating duties. The valve should be reopened as soon as possible. |
| Normally closed (NC) | The valve is unsecured and the Area Operator or designate may temporarily open the valve as part of their normal operating duties. The valve should be reclosed as soon as possible. |
| Car sealed open (CSO) | The valve is secured with a cable tie to prevent inadvertent operation. The Area Operator or designate may close the valve when an Isolation Control Certificate (ICC) is in the correct state. The valve should be locked when not in its normal position. The valve may be reopened when the ICC is in the *de-isolation in progress* state. |
| Car sealed closed (CSC) | The valve is secured with a cable tie to prevent inadvertent operation. The Area Operator or designate may open the valve when an ICC is in the correct state. The valve should be locked when not in its normal position. The valve may be reclosed when the ICC is in the *de-isolation in progress* state. |
| Locked open (LO) | The valve is secured with a metal chain or metallic cable tie and lock to prevent unauthorized operation. The Area Operator or designate may close the valve when an ICC is in the correct state. The valve should be locked when not in its normal position. The valve may be reopened when the ICC is in the *de-isolation in progress* state. |
| Locked closed (LC) | The valve is secured with a metal chain or metallic cable tie and lock to prevent unauthorized operation. The Area Operator or designate may open the valve when an ICC is in the correct state. The valve should be locked when not in its normal position. The valve may be reclosed when the ICC is in the *de-isolation in progress* state. |

*Continued*

DocuSign Envelope ID: DBC83A32-C98A-4963-9E1E-44593247DA33



## Valve Security, Continued

Note: Valves are car-sealed and tagged to identify their correct status (open or closed) when their inadvertent operation could result in a higher risk of a safety, health, or environmental incident. A Structured Risk Assessment (such as a Hazard and Operability Review [HAZOP]) usually identifies the need for a valve to be car-sealed in a certain position due to potential line rating or relief issues if the valve was moved to a different status.

▲ **CAUTION:** Valves in their isolated state for work **must** always be tagged and locked.

**Documentation**

Critical valves should be marked on facility P&IDs. In addition, a Site Valve Register **must** be kept of all CSO/CSC and LO/LC valves, which states the reason each valve is so designated. All CSO/CSC and LO/LC valves **must** have a field tag that indicates the normal valve position and gives a unique identification (tag) number that can be referenced to the Site Valve Register.

**Process**

When a CSO/CSC or LO/LC valve is moved from its normal position:

- The Site Valve Register **must** be referenced to determine whether alternative controls (identified from HAZOP) **must** be implemented prior to moving the valve from its normal position.
- This action **must** be authorized by an Area Authority.
- If the valve is part of an isolation, it **must** be secured, locked, and tagged.
- This action should be managed with a Temporary Defeat certificate (SCC), if it is not part of an isolation.

When a CSO/CSC or LO/LC valve is returned to its normal position:

- This action **must** be authorized by an Area Authority and the valve **must** be locked (for LO/LC valves) or car-sealed (for CSO/CSC valves).
- Close out any Temporary Defeat certificates (SCC).

**Change management**

A permanent change to a critical valve's normal position or security level **must** be approved through the Management of Change (MOC) process. This will initiate an appropriate level of technical and risk review, and will confirm that the change, once approved, is documented in the following:

- P&IDs
- Site Valve Register (if applicable)

**Effectiveness confirmation**

All CSO/CSC and LO/LC valves **must** be field-checked against the latest P&IDs as per PU car seal program

- The valve is in the correct position.
- CSO/CSC valves are secured with cable-ties.
- LO/LC valves are secured with locks.
- Identification tags are securely in place and are legible.

DocuSign Envelope ID: DBC83A32-C98A-4963-9E1E-44593247DA33



# 4.5 Isolating Systems and Equipment

**Purpose**

This section provides guidelines to protect personnel and equipment when isolating equipment or systems for work. The responsibilities and protective measures to be taken when isolating and working on systems are also described.

> Note: Permanent or long-term isolation of equipment or facilities may follow these practices; however, the activity must first be evaluated and approved in accordance with the management of change (MOC) process.

**Scope**

Isolation activities include:

- Energy isolations (process, mechanical, and electrical)
- Draining and depressurizing
- Hydrocarbon freeing
- Breaking containment
- Blinding
- Cleaning

Each job **must** be evaluated for complexity and risks to determine requirements and whether a job-specific isolation plan is required. This plan should include, as a minimum:

- Detailed activity instructions
- The order in which activities are to be performed
- Any special precautions that should be taken during each step

**Conflicting work**

Isolation activities can introduce numerous hazards that **must** be managed, such as:

- Potential for hydrocarbon release
- High level of work activity and congestion in the area
- Manual handling

**Reference:** Section 6, "Simultaneous Operations" for guidance on other activities that are restricted during isolation activities.

DocuSign Envelope ID: DBC83A32-C98A-4963-9E1E-44593247DA33



## 4.5.1 Energy Isolation and Isolation Control Certificate

**Introduction**

Energy isolations are intended to remove all sources of energy from equipment to enable them to be safely removed from service, and keep them out of service for the duration of the work.

Energy isolations are primarily:

- Process isolations
- Mechanical isolations
- Electrical isolations

Energy isolations are managed by an Isolation Control Certificate (ICC).

**Reference:** Section 4, "Tools," Isolation Control Certificate

**Energy isolation practice**

The Company's energy isolation practice is to achieve "zero energy" and demonstrate zero energy to the Permit Holder. This ensures that work on facilities and equipment does not cause any unexpected or uncontrolled release of energy that can cause injury to personnel or damage to the facilities or the environment.

**Goal**

The goal of energy isolation is to allow the work to proceed safely by preventing:

- Personnel who are working on the equipment from being exposed to process materials, live equipment, toxic substances, or stored energy.
- Operation of the isolated equipment while it is being worked on.

*Continued*

DocuSign Envelope ID: DBC83A32-C98A-4963-9E1E-44593247DA33



## Energy Isolation and Isolation Control Certificate, Continued

**Isolation flowchart**

The flowchart below summarizes the isolation process flow.

Figure 4-7 Isolation Process Flow

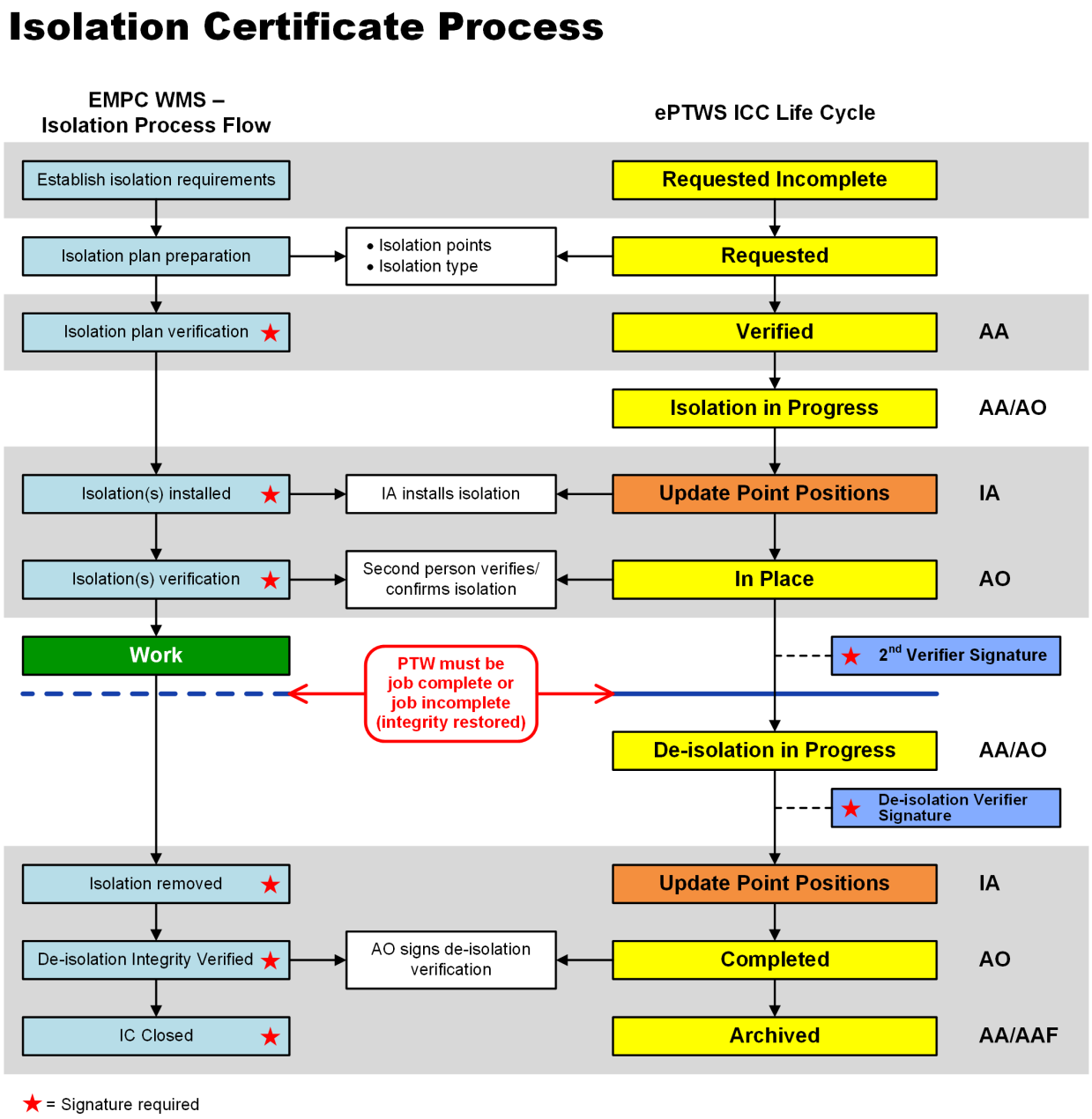


*Continued*

DocuSign Envelope ID: DBC83A32-C98A-4963-9E1E-44593247DA33



## Energy Isolation and Isolation Control Certificate, Continued

**General energy isolation process**

Use the following process for preparing and executing energy isolations to confirm that appropriate steps have been taken to isolate energy sources. In addition, a job-specific isolation plan by which mechanical isolation is undertaken may be required, depending on the complexity of the job.

Table 4-5 Energy Isolation Process

| Task | Action |
|---|---|
| 1. | Plan and prepare the isolation by completing an Isolation Control Certificate (ICC). An ICC is not required for "Personal Isolations" that meet the criteria described later in this section (page 4-45). |
| 2. | For complex electrical isolations, review the appropriate electrical diagrams to identify the isolation, grounding, and testing points. A copy of these marked-up electrical diagrams should be included in the Permit Pack. |
| 3. | For complex process isolations or when lines are not visibly traceable in the field, review the Piping and Instrumentation Drawings (P&IDs) and mark up the energy points that need to be isolated, flushed, or purged. A copy of these marked-up P&IDs should be included in the Permit Pack. |
| 4. | For complex mechanical isolations, review the equipment drawings and identify any moving parts that **must** be stopped, wedged, removed, or uncoupled. |
| 5. | If necessary, compare the P&ID for the system to be isolated to the actual system (also known as "walking the lines") to confirm that the P&ID is accurate and to identify:<br>▪ Low points where liquids may not be drained<br>▪ Drain, vent, and test points in piping or vessels<br>▪ Instrumentation that needs to be protected or defeated<br>▪ Bleed points, vents, gauges, or break methods where zero energy can be confirmed<br>▪ Other energy sources<br>▪ How zero energy will be demonstrated to the Permit Holder |
| 6. | Depending on complexity, prepare a job-specific energy isolation plan. |

*Continued*

DocuSign Envelope ID: DBC83A32-C98A-4963-9E1E-44593247DA33



# Energy Isolation and Isolation Control Certificate, Continued

Table 4-5 Energy Isolation Process, continued

| Task | Action |
|---|---|
| 7. | If necessary, perform an engineering review to confirm that the design limits are not exceeded:<br>▪ If filling vessels and pipework with water, which would not normally be exposed to full water volumes (static head and specific gravity)<br>▪ When pressure testing the isolations;<br><br>Confirm that all specification changes are accounted for in the isolation plan. |
| 8. | Depending on complexity, energy sources, and magnitude of the isolations, consider performing a Risk Assessment on the proposed energy isolation plan (consult a Risk Screener). |
| 9. | As required, obtain approval of the Isolation Control Certificate and any specific isolation plan. |
| 10. | Perform isolations, including Lock-out, Tag-out. |
| 11. | Update the status of all isolation points on the ICC. |
| 12. | Verify (using a second independent, competent person) that the isolations are in place and effective. The verifier signs the field copy of the ICC. |
| 13. | The Area Operator demonstrates isolation integrity (zero energy) to the Permit Holder, who accepts the permit, if satisfied with the level of energy isolation for the proposed work. |

**Remote Field Operations**

For Remote Field Operations, when an Area Operator is not present, the isolations shall be implemented by a competent Permit Holder, and updated and signed on the hardcopy confirming that the isolations are in place. If the isolation plan needs to be changed, the AA will be consulted, verbal approval obtained and the changes will be made on the hardcopy form.

Second verifier requirements for isolations that do not meet the “personal Isolation” criteria shall be conducted by the same individual, if working on their own.

*Continued*

DocuSign Envelope ID: DBC83A32-C98A-4963-9E1E-44593247DA33



## Energy Isolation and Isolation Control Certificate, Continued

**Isolation planning**

Isolation of equipment **must** be planned so that the risks associated with removing from service and reinstating on completion of work are minimized.

All isolations **must** meet or exceed the requirements of this Global Work Management System.

The following key points should be considered:

- Facility system isolation requirements should be identified early in the work planning cycle so that adequate time is available for a Risk Assessment, if required (a Risk Screener will determine the appropriate type of Risk Assessment).
- Job-specific plan should be prepared for complex energy isolation. These plans should include (as applicable):
  - Marked-up P&IDs showing the isolation points and the drain, fill, purge, and pressure-testing points

    Note: Lines should be walked to confirm the accuracy of the P&IDs and to identify hazards such as low points where liquids can collect and check valves that can trap pressure.
  - Marked-up electrical diagram showing isolation and test points
  - Engineering evaluation, when required
  - Step-by-step detail of individual isolation points and any specific sequence for isolating or de-isolating required
  - Emergency response (such as rescue plan and rescue equipment)
  - Provision for the protection of sensitive equipment
  - Isolation testing plans
- Boundary isolations may be put in place to cover several planned activities in an area of the facility. The reason for the isolation should be documented in the scope of the work planned. An ICC **must** be developed and identified as a *boundary isolation* and all individual work permits **must** be cross-referenced to this boundary isolation.

  **Reference:** See "Boundary isolations" later in this section.
- The equipment or facility system to be isolated **must** be rendered to a "zero energy" state. Valve and blind isolations should be located as close as possible to the equipment or system to be isolated.

*Continued*

DocuSign Envelope ID: DBC83A32-C98A-4963-9E1E-44593247DA33



## Energy Isolation and Isolation Control Certificate, Continued

**Isolation planning**, continued

- Inability to implement isolations:
  - Changes to the ICC may be made by the Isolating Authority (IA) to improve the integrity of the isolation (such as wrong valve, leaking valve, or seized valve) with the approval of the Area Authority. The reason for the change **must** be recorded on the ICC and other relevant documentation (P&ID, written isolation and reinstatement plans updated).
  - Changes can be hand written on the printed ICC by the IA as a line item but notation **must** be made why the change was made and that the AA has been consulted and approved the change. The Isolation Tag can be hand written.
  - A "Lesson Learned" is entered on the ICC, for the next time that the ICC is copied, to explain the change (e.g. confirm leaking valve "x" has been repaired or isolate using valve "y"). Alternatively, the ICC can be edited.
  - Changes should not be made to isolations that are "*In place*" other than to allow testing of the equipment using the Sanction to Test (STT) process.

**Typical process isolations**

Facility systems to be isolated can have many sources of energy that need to be removed or isolated. These include:

- Liquid and gas lines
- Analyzer lines
- Drain and vent connections
- Flare lines
- Pressure safety valves (PSVs), vacuum breakers, and thermal relief devices

  ▲ **CAUTION:** Do not isolate pressure, vacuum or thermal relief safety valves until the equipment is isolated and adequate vents are open to prevent overpressure or vacuum from occurring.

- Temporary hoses and small-bore pipes
- Recycle lines
- External seal flush lines on pumps
- Fuel lines to engines and turbines
- Jacket water to pumps or compressors
- Seal or buffer gas on compressors
- Seal or lube oil systems on pumps, turbines, or compressors
- Stored energy (e.g. gravity, wind, spring tension and buoyancy)

*Continued*

DocuSign Envelope ID: DBC83A32-C98A-4963-9E1E-44593247DA33



## Energy Isolation and Isolation Control Certificate, Continued

**Isolation Control Certificate**

The Isolation Control Certificate (ICC) **must** be used to document the isolation and approval of equipment or systems and will be used to track the status of all isolations.

The isolation plan **must** be *Verified* by the Area Authority (AA) or designate before it can be applied. Isolation points **must** be signed off (electronically or on the paper certificate for remote fields) by the Isolating Authority (IA) to confirm they have been put in place. Associated work permit(s) can only be issued once the AA or designate confirms that all isolations are *In Place*. The ICC **must** remain in force until all work permits associated with the ICC have been completed.

The ICC **must** be cross-referenced to all relevant work permits and is the principal control once isolations are in place. The ICC performs the following functions:

- Lists the location of the isolation points and their normal status.
- It is a record of any fittings (such as analyzer points, sample points and plugs) that have been removed or moved from their normal state to ensure that they are reinstated.
- It is a record of all drain, vent, and bleed points for valve integrity tests. (Operation of these valves does not need to be recorded as an amendment on the ICC but would be checked when returning equipment to service.)
- Authorizes any temporary de-isolation for equipment testing (Sanction to Test).
- Authorizes and records each de-isolated point.
- As necessary, includes attachments of marked-up P&IDs, electrical diagrams, and isolation plans.

**ICC number**

The Isolation Control Certificate (ICC) has a unique number assigned. The certificate number **must** always be stated (by linking) on related work permits and any relevant lock-out tags.

**Form location**

Refer to Section 4.7, "Tools," Isolation Control Certificate and in the electronic Permit to Work System.

**Valid period**

The ICC can, and will in many cases, have a longer validity period than the work permit. An ICC does not require renewal but the status of the isolations will be confirmed prior to approval of the associated permits each day.

*Continued*

DocuSign Envelope ID: DBC83A32-C98A-4963-9E1E-44593247DA33



## Energy Isolation and Isolation Control Certificate, Continued

**Boundary isolations**

A *boundary isolation* involves an area of the facility that is to be isolated so that several activities can safely take place within a common set of strategically placed isolations. Thorough planning and preparation is essential when planning boundary isolations. A planning team, including the AA, IA, and additional technical support may be required. Consideration **must** be given to equipment that may need to be returned to service or test run before other activities are finished when determining whether boundary or individual permit isolations are more appropriate.

The team should meet and thoroughly review and agree on the scope of the boundary isolation and on the associated tasks. This review **must** include the identification of potential areas of trapped inventory that normally may not be vented and drained (for example, check valves or non-return valves).

An ICC **must** be developed and identified as a boundary isolation that clearly identifies where isolation points are appropriate for all the individual tasks to be carried out within its scope of work. Where multiple work permits are carried out against a boundary isolation, each work permit **must** be cross-referenced to the ICC. All the cross-referenced work permits **must** be completed before the ICC can be closed.

If any of the proposed tasks require a level of isolation or implementation of control measures greater than that covered by the boundary isolation, then a separate ICC **must** be developed.

**Boundary isolations after work activities start**

Once work is in progress, a subsequent work permit may be identified and may be applied within the recognized framework of existing boundary isolation. The subsequent work permit to be added **must** establish clearly that the existing isolations are appropriate for the scope of work.

The original boundary isolation **must** be reviewed for any subsequent work permits. Entry into a confined space within a boundary isolation requires a specific ICC and Confined Space Entry Permit, including the implementation of additional security measures.

Boundary isolations **must not** be removed until all cross-referenced work permits are complete.

If work on a particular area of the facility within the boundary isolation needs to be suspended due to scope change, then a new boundary isolation may need to be defined and documented before the existing boundary isolation can be altered. All affected permits will be suspended before the boundary isolations can be altered.

When the de-isolation of the boundary isolation is proposed, an isolation review team that includes the AA and IA **must** confirm that all cross-referenced work permits are complete. They **must** also confirm that equipment within the boundary isolation is in a safe condition.

*Continued*

DocuSign Envelope ID: DBC83A32-C98A-4963-9E1E-44593247DA33



## Energy Isolation and Isolation Control Certificate, Continued

**Energy isolation safety precautions**

Include the following safety precautions when performing energy isolations:

- When isolating equipment, be careful not to trap liquids in sections that do not have pressure protection to avoid pressure buildup due to increases in ambient temperature that could lead to failure of the equipment.
- Stand to the side (avoid line-of-fire) when operating valves to avoid being struck if the valve stem fails or if the packing dislodges or leaks.
- Do not stand below valves when operating chain wheels in case of mechanical failure.
- Confirm that stable access is available, and be aware of posture, obstructions, or pinch points.
- Valves that are difficult to operate should be lubricated and assistance (mechanical or people) should be obtained.
- Where practicable, use the valves closest to the equipment for isolation, while still allowing for depressurizing and draining.
- All isolation valves **must** be secured and locked in the isolated state and tagged.
- Do not close *car sealed open* (CSO) or open *car sealed close* (CSC) valves without first referring to the Site Valve Register or P&ID (or both) to ensure that the protection provided by the CSO or CSC valve is provided by an alternate means, such as:
  - Another PSV
  - Process is shut down and depressurized
  - Rate is reduced

  Note: An MOC is required if the CSC or CSO valve status will be changed permanently.

- Immediately before approving permits to open equipment, open vents and confirm that pressure has not built up. Leave the vents open while the equipment is opened up to confirm that the pressure does not build up again. Vent valves **must** be controlled by the ICC process.

  ▲ **CAUTION:** Do not leave process vents to the atmosphere open unless they are directed to a safe location and secured. All vents and bleeds should be closed when not actively working on or in attendance.

  ! **WARNING:** Where hot work or confined space entry is performed in the proximity of a hydrocarbon vent (potential release point), appropriate control measures (such as gas testing and area monitoring) **must** be implemented.

- Valve body cavity bleeds are not to be attempted if there is only a grease nipple fitting fitted to the valve bleed port without an isolation valve. If the valve body cannot be bled down, then the assumption **must** be that there are trapped vapors or liquids.

*Continued*

DocuSign Envelope ID: DBC83A32-C98A-4963-9E1E-44593247DA33



## Energy Isolation and Isolation Control Certificate, Continued

**Energy isolation safety precautions,** continued

- When working on reciprocating engines, such as diesel-driven fire pumps or standby generators, their starting medium (battery, air, or hydraulic) **must** be disconnected and tagged before the energy isolation is considered complete.
- Off-Auto-Start switches **must** be placed in the Off position.
- Heat tracing **must** be isolated when there is the potential to damage the heat tracing and cause arcing or injury, or when lagging or bridles are being removed or worked on. Heat tracing **must** also be isolated when a vessel is being prepared for entry.
- Circuit breakers **must** be isolated and locked out. The circuit(s) **must** be proven to be dead before any electrical work can proceed.
- When the electrical isolation is for mechanical work (for example, pump motor for pump repairs), the electrical isolation **must** be proven by confirming the right circuit breaker has been isolated, locked, and tagged and attempting to start the motor. Be mindful that process shutdowns may prevent the motor from starting. If in doubt, have an electrician test the circuit.

**Personal Isolations**

Personal Isolations can be performed for lower risk, short-duration tasks such as taking samples, isolating instruments, replacing pressure gauges, replacing small filter cartridges or small valves, working on small inhibitor pumps, small lighting circuit jobs and other similar jobs.

Note: PUs should establish a list of jobs that can be performed as Personal Isolations.

The personal isolation **must** provide Care, Custody, and Control of the equipment to the person conducting the work (Permit Holder). Isolations will typically be visible to the PH (adjacent to the work face). If a point is not visible, the isolation point will be locked and tagged with a Functional lock and the key will be retained by the PH.

The criteria for personal isolation are as follows:

- Before approval, the AA or designate **must** be satisfied with the competence of the person conducting the work to execute the isolation and to complete the task safely. The AA can request an AO to assist with the isolations, if required.
- De-isolation takes place immediately upon completion of the task.
- An ICC is not required if the task is completed before the end of shift. An ICC will be processed with lock-out/tag-out if not completed by end of shift.
- The person conducting the work may receive assistance from others but the person **must** be present at all times while work is in progress.
- The person conducting the work confirms zero energy and demonstrates zero energy to any person assisting.
- If the work site is to be left unattended during the shift, the equipment will be isolated, locked, and tagged, including the capping or plugging of open ends.
- During permit closeout, the AO **must** confirm that the isolation points are returned to the normal state.

*Continued*

DocuSign Envelope ID: DBC83A32-C98A-4963-9E1E-44593247DA33



## Energy Isolation and Isolation Control Certificate, Continued

**Multiple isolation point locking process**

When more than one isolation point is required, the following is the process to be used:

Table 4-6 Multiple Isolation Points Locking Process

| Task | Activity |
|---|---|
| 1. | An Isolation Control Point (ICP) **must** be selected and be in a prominent and accessible location such as a Control Room, Permit Coordination Center, or a location on the equipment. |
| 2. | Each isolation point **must** be locked and tagged with a lock from the keyed alike lock set(s). |
| 3. | The key(s) from the lock set(s) used on each isolation point are placed in the ICP box and locked with a uniquely keyed Operations Functional lock by the AO. |
| 4. | Each Permit Holder places their uniquely keyed Functional lock onto the ICP box to have control of the isolations. The PH retains the key in their custody while working on the job. The key is handed to their relief or returned to their supervisor if they will leave the job or site. |
| 5. | As each job is completed, the PH *Job Complete*s their permit and removes their Functional lock from the ICP box. |
| 6. | When all linked permits are *Job Complete* and all PH Functional locks have been removed, the ICC can be moved to the *de-isolation in progress* state. The Area Operator is then able to remove their Operations Functional lock, access the isolation key(s) from within the ICP box, unlock each isolation point, and return the equipment to service. |

**Electrical isolations**

Competent personnel will be authorized by the Production Unit to conduct electrical isolations. Typically, an Electrical Technician is authorized to perform electrical isolations that require isolations beyond opening a breaker and locking it, for example, racking out breakers, disconnecting terminals, or applying grounds (earths).

*Continued*

DocuSign Envelope ID: DBC83A32-C98A-4963-9E1E-44593247DA33



## Energy Isolation and Isolation Control Certificate, Continued

**Electrical isolation plans**

All circuit breakers, switches, and combined fuse-switch units for the equipment to be isolated should be locked out when possible.

All electrical isolations **must** be tested and shown to be effective before exposing personnel to electrical equipment. Job-specific isolation plans **must** specify the methods by which the electrical isolations will be tested.

The following process **must** be followed when isolating electrical equipment to be worked on, or reinstating it afterwards:

- Starting and stopping of high voltage motors should be controlled when personnel are working in High Voltage switchgear rooms.
- The Electrical Technician **must** confirm that the equipment is switched off. An isolation lock **must** be attached to the appropriate isolation switch on the switchboard.

  ! **WARNING:** If no locking facility exists, the Electrical Technician **must** disconnect supply cables or rack out the circuit breaker to achieve a positive electrical isolation. In this case, the cabinet **must** be secured and tagged to prevent reconnection of the cables, or racking the breaker closed, until the job is completed.

- When the power cable is disconnected from the equipment, the Isolating Authority (Electrical Technician or Area Operator) will use a lock from the lock set to isolate the electrical supply.
- The Electrical Technician can then complete any grounding (earthing).
- The electrical isolation integrity **must** be confirmed and zero energy demonstrated by the Isolating Authority using appropriate methods.

  ▲ **CAUTION:** When verifying that electric circuits or electrically operated equipment is de-energized, consider that a process control such as a pump low-level shutdown may be preventing the equipment from starting when the start button is pressed. If possible, temporarily defeat those functions when attempting to check electrical isolations.

- If more than one permitted job is being conducted on isolated equipment, each Permit Holder **must** put a Functional lock on the ICP that prevents re-energizing before the last Functional lock is removed.
- As each permitted job is completed, the uniquely keyed Functional locks are removed from the ICP.

  ! **WARNING:** The *Electrical Integrity Manual* **must** be consulted for further precautions to be taken when isolating high voltage or high energy electrical equipment.

  **Reference:** *Electrical Integrity Manual*, "Electrical Safe Work Practices"

*Continued*

DocuSign Envelope ID: DBC83A32-C98A-4963-9E1E-44593247DA33



## Energy Isolation and Isolation Control Certificate, Continued

**Crew changes, shift changes, and callouts**

The integrity of the energy isolation system **must** be maintained during crew changes, shift changes, and callouts. The following process **must** be followed during callouts or during crew or shift changes:

- Personnel leaving the facility before the work is completed **must** inform their Functional Supervisor of the status of the work and turn over their Functional lock key(s) to their supervisor or the oncoming Permit Holder.
- Personnel coming on shift or callout to work on locked-out equipment **must** actively participate in the toolbox meeting, including a review of the Permit Pack (including the ICC).
- The oncoming Permit Holder **must** confirm that a Functional lock is on the Isolation Control Point for the permitted work being performed and take control of the key from the off-going PH or their Supervisor before signing acceptance of the permit.

**Removal of Functional locks by the AA**

If a job is complete but an individual leaves the site without removing their Functional lock or turning over their isolation key(s) to the Functional Supervisor, the only person authorized to remove the lock is the Area Authority. The AA should be accompanied by the Functional Supervisor when removing the lock.

PIC endorsement **must** be obtained prior to lock removal.

The AA **must** verify that the lock can be removed and all isolating devices may be returned to the normal operating position. The Functional Supervisor will notify the individual who initially installed the lock of its removal when the individual reports back to work.

The Functional Lock Removal form in the "Tools" section can be used to facilitate this process.

*Continued*

DocuSign Envelope ID: DBC83A32-C98A-4963-9E1E-44593247DA33



## Energy Isolation and Isolation Control Certificate, Continued

**Multiple isolation requests**

Instances can arise when several jobs, each with its own work permit, require the same isolation points. In these cases, the following precautions built into the energy isolation process will enable this situation to be safely managed:

- The ICC **must** be cross-referenced (linked) to each permit and included in each Permit Pack.
- Copies of the relevant work permits should be located with the Area Operator's or Central Control Room (CCR) copy of each ICC while the work permit is active (when ePTWS is used, this information can be stored and accessed from the system).
- Work permits are referenced to the ICCs.
- If a point is part of two separate isolations, the point **must** have two locks and tags (one from each keyed alike lock set) that are secured in their respective ICP boxes. This prevents the point from being de-isolated until the jobs associated with both ICPs are completed. The ICP number **must** be written on the respective "Isolation Tags" identifying the two ICPs involved.
- Each energy isolation job will be completed as a stand-alone job.
- Protection from de-isolation before all work is finished is achieved by:
  - Ensuring that all Permit Holders apply their Functional lock and tag to the ICP. This results in more than one Functional lock being in place on the ICP.
  - The tag on each lock identifies the job that the lock is protecting.
  - A Permit Holder can only remove the Functional lock associated with their permit (custodians of the key).
  - All affected Permit Holders who are still working under the isolation will have their Functional locks and tags on the ICP until their permitted work is completed.
  - As work is completed, each Permit Holder will remove their Functional lock and tag from the ICP.
  - Once all Permit Holder Functional locks are removed, the AO Functional lock can be removed and the ICP opened to retrieve the lock-set key(s) and commence de-isolation.

*Continued*

DocuSign Envelope ID: DBC83A32-C98A-4963-9E1E-44593247DA33



## Energy Isolation and Isolation Control Certificate, Continued

**Long-term isolations**

Long-term isolations (LTIs) are defined as isolations that no longer have work being performed against them and remain in the isolated state until parts, or other services, are provided. As required, a detailed register of long-term isolations is maintained. Each affiliate will set their timeline for moving long-term isolations to *out of service* (OOS). Locks **must** be a functional lock or special designated OOS lock.
Long-term isolations should be subject to two levels of review:

- A weekly review of the LTI register to check their status (e.g. parts have not arrived, equipment not required, repairs scheduled, etc.).
- A quarterly field assessment to physically check the integrity of all isolation points e.g. tags legible, securing devices in place, locks in good state, no leaks and no pressuring up of the system.

Equipment that is in LTI for a period greater than 6 months should be evaluated using the MOC process.

Equipment that is deemed "out of service" (no future use) is evaluated to determine whether it should be removed, replaced, or "positively isolated" using the Company's MOC process and removed from the LTI list. Equipment strategies and integrity programs shall be updated accordingly.

Electrical equipment that does not have all service cables, control connections, or power sources isolated with an air gap **must** have a lock on the disconnecting means.

Before any work is recommenced against an LTI, a full integrity field inspection of the isolations **must** be conducted and the LTI moved to an ICC.

DocuSign Envelope ID: DBC83A32-C98A-4963-9E1E-44593247DA33



## 4.5.2 Draining and Depressurizing

**Introduction**

This section provides guidelines to protect personnel and equipment when draining and depressurizing equipment or systems, particularly process or hydrocarbon-containing systems.

**Prerequisites**

Prior to draining or depressurizing, the equipment or system **must** be fully isolated.

**Reference:** Section 4.5.1, "Energy Isolation and Isolation Control Certificate"

**Planning Draining and Depressurizing Activities**

The following guidelines should be used to plan draining and depressurization:

- Confirmation that the equipment or system is isolated.
- The complexity and risks associated with the activities should be used to determine if a job-specific plan should be prepared.

Job planning should consider the following:

- Special conditions to be established before draining and depressurizing.
- Step-by-step activities to be performed.
- Facility critical operating parameters (pressures, temperatures, capacities) that **must not** be exceeded.
- Required temporary defeats, and when critical devices may be reinstated.
- Means to monitor the progress of the preparation and confirm completion.
- The gases to be vented and liquids to be drained, reviewing the appropriate Safety Data Sheets (SDS).
- The necessity for a Risk Assessment of the activities.
- Any additional personal protective equipment (PPE) required.
- Emergency or abnormal operating procedures.
- If a Critical Work Permit for "Breaking Containment" is required.

**Depressurizing:**

The following additional guidelines should be used to plan depressuring activities:

- Depressure the equipment to as low as practicable slowly through the closed flare or vent system, avoiding liquid carryover to the flare system.

  ▲ **CAUTION:** If hazardous or flammable gas **must** be depressurized to the atmosphere, it **must** be performed under strictly controlled conditions, taking into account wind strength and direction. Personnel working downwind of any system being drained or vented that could be impacted **must** be instructed by the Area Operator to leave the area. The precautions listed on the Critical Work Permit and/or JSA for "Breaking Containment" should detail the appropriate controls and communications requirements.

- Depressure all valves through the valve body drain, contain fluids.
- Verify equipment depressurization with several bleed points and pressure gauges.

*Continued*

DocuSign Envelope ID: DBC83A32-C98A-4963-9E1E-44593247DA33



## Draining and Depressurizing, Continued

**Planning Draining and Depressurizing Activities,** continued

**Draining:**

The following additional guidelines should be used to plan draining activities:

- The complexity and risks associated with the activities should be used to determine if a job-specific plan should be prepared.
- Light ends (such as, methane or ethane) containing liquids should be displaced into vessels of similar composition and pressure to avoid the potential for low temperature embrittlement by draining these liquids to the drain systems, unless the drain systems are designed for low temperatures.
- Drain liquids slowly to the closed drain system, making sure not to exceed its capacity. When this is not possible, an estimate of the liquid quantity should be made and sufficient local containment should be provided.
  - Drain liquids from the lowest point(s) of the system.
  - Avoid overpressuring or overfilling the closed drain system.
  - Be aware of any sand carryover from the vessels, which could cause problems with the process equipment.
  - Provide spill containment and waste disposal.

  ! **WARNING:** Do not depressure gas into the drain system.

  ! **WARNING:** Some vessels have standpipes or weirs that can trap liquids on the side away from the drain line.

  ▲ **CAUTION:** Do not allow the temperature of the drain system or hoses to go below their minimum design temperature or brittle failure can occur.

  ▲ **CAUTION:** If it is necessary to drain liquids through hoses to an open drain, follow these precautions:

    - Use hoses that are compatible with the fluids to be drained.
    - Include a valve that will enable control of the rate of draining.
    - Secure the ends of the hose.
    - Provide spill containment at all hose connections.
    - The hose nozzle **must** be electrically grounded (earthed).

  Note: A JSA is required when draining or venting to atmosphere when pressures are above drain or flare header residual pressure.

  ▲ **CAUTION:** Do not use excessive force on drain valves.

  ▲ **CAUTION:** Any oil-contaminated materials **must** be removed because they can be prone to spontaneous ignition.

- Check that all low points are drained and that no pockets of liquid remain.

*Continued*

DocuSign Envelope ID: DBC83A32-C98A-4963-9E1E-44593247DA33



## Draining and Depressurizing, Continued

**Safety precautions**

Use the following safety precautions when draining and depressurizing facility systems:

- Appropriate PPE **must** be worn to protect against hazards specific to draining and depressurizing. These include:
  - Increased eye protection (for example, goggles or face mask) when bleeding down equipment
  - **Breathing apparatus** when conditions (confined area, where asphyxiation could occur) and state of the equipment to be broken (i.e. whether the equipment may contain toxic substances such as $H_2S$, hydrocarbons or benzene)
- Do not use excessive force if the bleed or drain valves are tight, use lubricant to free up valve stems and bushings or have them replaced during the shutdown.
- Drain before depressurizing fully so that liquids do not continue to vapor off and prolong the depressurizing phase.
- Drain and depressurize slowly. This helps prevent:
  - Hydrates
  - Erosion of equipment and piping if sand particles are present
  - Flashing or blowback from open drain systems

  ! **IMPORTANT:** Potential flashing or blowback from open drain systems **must** be considered when evaluating other work or activities at the facilities.
- Open more than one bleed valve to confirm that pressure does not remain trapped in the system due to a blocked valve or hydrates.
- Be careful not to exceed equipment temperature, pressure, flow, or metallurgic limits (including drain systems, flare systems, and sumps). If necessary, allow excessively hot or cold fluids to stabilize before draining.

  ! **IMPORTANT:** Consider that volatile liquids can become colder when depressurized. In these cases, consideration should be given to displacing as much process liquid as possible back into the system before depressurizing. Do not allow the temperature of the drain system or hoses to go below their minimum design temperature or brittle failure can occur.
- Open drain water seals (P-traps) may allow flammable or toxic vapors to release to atmosphere if the seal is not maintained. Flush open drain systems with water before and after draining to an open drain system to prevent blowback or flashing of flammable gases.
  - Open drain valves and use hoses, if necessary, to drain liquids to drain systems. Liquids can be trapped in weirs, standpipes, instrument bridles, or dead legs.

*Continued*

DocuSign Envelope ID: DBC83A32-C98A-4963-9E1E-44593247DA33



## Draining and Depressurizing, Continued

**Safety precautions,** continued

- Use double manual drain valves to depressurize systems when the potential for hydrates exists. The upstream valve **must** be opened fully first, then the downstream valve can be opened. This is to ensure that, if the downstream valve hydrates up due to throttling, the upstream valve is unaffected and can be closed. The downstream valve is closed before the upstream valve when depressurizing has been completed. Bleed off any trapped fluids between the two drain valves by cracking open the downstream valve, then close it when pressure is fully bled.

  ▲ **CAUTION:** Only valves designed for throttling should be used as the downstream, throttling valve.

- Do not attempt to clear atmospheric bleed valves that are blocked and under pressure. Connect pressure-rated hoses between the blocked valve and the closed drain system and attempt to use differential pressure to clear the blockage. If the blockage cannot be cleared using this method, or if this method could overpressure the closed drain system, the system will need to be isolated elsewhere to enable maintenance to clear the blockage or replace the problem valve.
- Hot work at the facility should be restricted based on the following considerations:
  - Venting flammable gases to atmosphere
  - Potential blowback or flashing of flammable gases from open drain systems
  - Potential for liquid overflow or carryover into drain or flare systems
  - Wind direction and strength
- All potential spills **must** be bunded or otherwise contained. The JSA should identify the need for, and type, of spill response equipment.

  ! **IMPORTANT:** Any spilled process or utility fluids **must** be disposed of in a proper manner. The SDS for any contaminants should be consulted. Disposal **must** be in accordance with the *Waste Management Manual*.

- Pressure relief valves, thermal relief valves, and vacuum breakers should not be isolated until the equipment is depressurized and adequate vents are open to prevent overpressure or underpressure of the equipment.
- Draining and depressurizing to closed drain or active flare systems may not bleed the pressure completely to zero. When residual pressure has been reached, it may be necessary to vent the remaining pressure to atmosphere in a safe manner.
- Corrosion in drain systems (especially offshore) can result in the loss of containment of drained fluids. Drain systems should be monitored or inspected, if practicable, before draining large volumes of fluids, or where drain systems may be exposed to design pressures.

DocuSign Envelope ID: DBC83A32-C98A-4963-9E1E-44593247DA33



## 4.5.3 Breaking Containment

**Introduction**

This section provides guidelines to protect personnel and equipment when breaking containment in systems such as hydrocarbons, chemicals, air, steam, fluids, and gases.

This section is focused on:

- Unbolting flanges and manways or removing screwed fittings on systems, such as pipes, vessels, exchangers, valves, turbines, compressors, and pumps
- Opening enclosures such as pig launchers or receivers and filter housings
- Orifice plate removal

At this stage of the facility isolation process, the equipment should be depressurized, drained, and at atmospheric or flare/drain residual pressure. Depending on the isolations achieved and the proposed work, purging of hazardous materials can be conducted before or after breaking containment. Purging requirements and method should be done at the planning phase.

In circumstances where the equipment cannot be hydrocarbon freed prior to breaking containment, a slight positive pressure should be established to ensure that air does not migrate into the system and form a combustible mixture (hydrocarbons and air) inside the equipment.

**Breathing apparatus** – the conditions (confined area, where asphyxiation could occur) and state of the equipment to be broken (i.e. whether the equipment may contain toxic substances such as $H_2S$, hydrocarbons or benzene) will determine if breathing apparatus will be required.

**Prerequisites**

Before breaking containment, the equipment and piping involved **must** be isolated, drained, and depressured.

**References:**

- Section 4.5.1, "Energy Isolation and Isolation Control Certificate"
- Section 4.5.2, "Draining and Depressurizing"
- Section 4.5.5, "Hydrocarbon Freeing"

*Continued*

DocuSign Envelope ID: DBC83A32-C98A-4963-9E1E-44593247DA33



## Breaking Containment, Continued

**Planning breaking containment activities**

The following guidelines should be used to plan breaking containment activities.

- The complexity and risks associated with the activities should be used to determine if a job-specific plan should be prepared.
- Job planning should consider the following:
  - Special conditions that should be established before breaking containment is commenced
  - Identifications of the locations where containment is to be broken
  - Step-by-step activities to be carried out
  - Any required temporary defeats of critical devices, and when critical devices may be reinstated
  - Substances that might be present and a review of the appropriate Safety Data Sheets (SDS)
  - The necessity for a Risk Assessment of the activities to identify risk mitigation measures
  - Spill containment and waste disposal that might be required
  - Additional personal protective equipment (PPE) required
  - Emergency procedures/process
- The Area Operator or a designated competent person should identify all break points with the Permit Holder. The Area Operator or designated competent person and the Permit Holder should agree on the location of first break (to minimize risk) and subsequent breaks.
- The Area Operator or designated competent person and Permit Holder should physically walk the line(s) to identify:
  - Hazards such as low points where liquids may collect and not be drained
  - Access and egress problems
- Confirm that the vessel/system is isolated, drained and depressured.
- The Area Operator or designated competent person **must** be present for the first break or when there is any doubt regarding the correct flange to be split.

*Continued*

DocuSign Envelope ID: DBC83A32-C98A-4963-9E1E-44593247DA33



## Breaking Containment, Continued

**Planning breaking containment activities**, continued

▲ **CAUTION:** When breaking each flange, it **must** be treated as though it could have pressure or liquid present. The PH or work team member should always be positioned on the upwind side of the flange to be broken. They will first loosen the bolts on the lower and opposite side from them, keeping the bolts nearest to them under control and enabling the line to separate in a manner that causes any spillage/release to be away from them. The flange should then be spread apart to check for the presence of any gas or liquids.

- After isolating, draining, and depressurizing the system; if a valve bonnet is to be removed, drain the valve and place the valve in the open position before loosening the bonnet bolts.

  ▲ **CAUTION:** Ball and plug valves can have pressure in the cavity under the stem packing and bonnet, regardless of the position of the valve and the pressure in adjacent lines. Ball and plug valves that are to be removed from the system **must** be opened, closed, and reopened to relieve pressure after the line is drained and depressurized.

  ! **IMPORTANT:** Consider hot bolting the flange(s) before breaking containment to reduce the potential for manual handling injuries and improved efficiency when executing the work.

**Clamp-lock fittings**

Particular care should be taken with a clamp-lock type of fitting. Clamp-lock fittings **must** only be removed by personnel trained in accordance with the manufacturer's instruction manual. No bolts are to be fully removed until the clamp rotates freely.

**Opening Live / Operating Systems**

Due to facility/equipment design, there are certain instances where Breaking Containment activities need to take place on equipment/operating systems that cannot be fully isolated. Examples:

- Removing Analyzers or Instruments from live low pressure systems
- Sampling- Production and Regulatory
- Installing Blinds – small volume/low pressure where no isolation exists
- Removing PSVs where no isolation exists

In these instances where there is no alternative isolation method(s) available the following additional control measures **must** be employed:

- A Risk Assessment **must** be conducted and endorsed by the Operations Manager.
- Any Risk Assessment **must** consider the introduction of air into the system/equipment, duration of task, complexity, type of service etc.
- A procedure/process to control the activity as per outcomes of the Risk Assessment **must** be developed and followed.

*Continued*

DocuSign Envelope ID: DBC83A32-C98A-4963-9E1E-44593247DA33



## Breaking Containment, Continued

**Emergency planning**

The emergency plan should consider the following:

- How to respond to a leak
- Availability of spill containment or cleanup equipment
- Knowing the location of the next available isolation valve
- Planning escape routes when working in congested or confined locations

Fire-fighting equipment **must** be readily available and the IA and the PH **must** be able to initiate the emergency alarm and contact the Central Control Room (CCR).

**Breaking containment safety precautions**

Use the following safety precautions when breaking containment:

- Appropriate PPE **must** be worn to protect against hazards particular to breaking containment. These may include:
  - Increased eye protection (for example, goggles or face mask).
  - **Breathing apparatus** - the conditions (confined area, where asphyxiation could occur) and state of the equipment to be broken (i.e. whether the equipment may contain toxic substances such as $H_2S$, hydrocarbons or benzene) will determine if breathing apparatus will be required.
- Hot work, **must** be restricted, in compliance with the SIMOPS Restrictions Table in Section 6, when breaking containment.
- All potential spills **must** be contained. The JSA should identify the need for, and type of, spill response equipment.

  ! **IMPORTANT:** Any spilled process or utility fluids **must** be disposed of in a proper manner. Consult the SDS for any contaminants.

- Except for hot bolting under controlled conditions, do not remove any bolts until the line or equipment is completely depressurized and spill containment is in place.
- Non-spark tools **must** be used when flanges are initially broken if there is a potential for hydrocarbons to be released.
- Do not place fingers between flanges or through bolt holes.
- When splitting insulated flanges (typically the first or last flange on a pipeline), cathodic protection units for each side of the flange **must** be turned off and the flanges electrically bonded before breaking.

DocuSign Envelope ID: DBC83A32-C98A-4963-9E1E-44593247DA33



## 4.5.4 Blinding

**Introduction**

Blinding is a positive and safe means of preventing the migration of hydrocarbons or hazardous substances into equipment or systems that are isolated.

**Definitions**

**Blank:** See *Blind*

**Blind:** A pressure-rated solid-steel plate fitted to the end of an open spool, valve, vessel, or other piece of equipment.

**Blinding:** The activity of isolating equipment or facility systems using blinds or spades.

**Spade:** A pressure-rated solid-steel plate installed between two flanges.

**Goal**

The goal of blinding is to establish a positive isolation (barrier) between process fluids or vapors so that work can proceed safely.

**When to blind**

Blinding **must** be conducted when positive isolation is required:

- For confined space entry into equipment.
- If the job site will not be attended at all times and a double block and bleed (DBB or DBV) cannot be established.
- Between existing production equipment and new equipment under construction.
- Between active production equipment and equipment that has been taken out-of-service (short or long term).
- Whenever segregation is required between systems.

**When blinding is not required**

Blinding is not required:

- If a double block and bleed (DBB or DBV) can be established and confined space entry is not involved.
- If immediate replacement of the item is to occur, and the job site will not be unattended.
- During short-term opening of the equipment or pipework (jobs completed within one shift), and the job site will not be unattended.
- On jobs where breaking containment to install blinds would involve greater exposure to risk (for example, time taken, location, size and number of blinds to be installed) than not blinding, provided that:
  - Not blinding is approved by the Person In Charge (PIC).
  - Approval not to blind is documented (for example, on the permit or JSA).
  - The work does not involve confined space entry.

*Continued*

DocuSign Envelope ID: DBC83A32-C98A-4963-9E1E-44593247DA33



## Blinding, Continued

**Prerequisites**

Blinding involves breaking containment. Prior to blinding, the equipment and piping involved **must** be isolated, drained and depressured.

! **WARNING:** Breaking containment can enable an oxygen atmosphere to coexist with hydrocarbons. Appropriate precautions **must** be taken, for example, by maintaining a slightly positive pressure in the system to prevent air entering.

**Planning blinding activities**

The following guidelines should be used to plan blinding activities.

- The complexity and risks associated with the activities should be used to determine if a job-specific plan should be prepared.
- Job planning should consider the following:
  - Any special conditions that should exist before blinding is commenced.
  - Step-by-step blinding activities to be carried out. Attention should be paid to the order in which blinds are installed, and later removed (blinding priority) to ensure that the equipment is protected (pressure safety valves) while there is the potential for pressure to build up (for example, when *positive isolation* is not in place).
  - Where practical, select isolation and blind positions to enable zero energy checks (drains or vents) before removing the blind.
  - Risk of liquid release is minimized.
  - A Task Hazard Assessment of the activities to identify risk mitigation measures.
  - Spill containment and waste disposal methods.
  - Additional personal protective equipment (PPE).
  - Emergency procedures/process.
- Locate blind and spade locations as follows:
  - Using P&IDs, identify all blind and spade locations.
  - Verify each location by field checking.
  - Record the blind locations on the ICC plan.
- Obtain a Critical Work Permit for Breaking Containment for the blinding to be done.
- Confirm that the vessel or facility system is isolated, drained, and depressurized.

*Continued*

DocuSign Envelope ID: DBC83A32-C98A-4963-9E1E-44593247DA33



## Blinding, Continued

**Planning blinding activities**, continued

Install blinds and spades using the appropriate breaking containment and blinding precautions.

▲ **CAUTION:** When breaking flanges to install spades, treat each break as though pressurized fluids were present.

! **WARNING:** The Permit Holder or person designated by the AA **must** confirm that:

- Blinds and spades are design rated.
- Blinds and spades are of the correct material specification (refer to piping/flange specification).
- New and correct gaskets are used.
- Correct bolts and nuts are used.
- Correct torque and pattern is used to tighten all bolts.

After blinds and spades are installed, they **must** be recorded on the ICC.

*Continued*

DocuSign Envelope ID: DBC83A32-C98A-4963-9E1E-44593247DA33



## Blinding, Continued

**Blinding and work permits**

The following are requirements regarding work permits when blinding is executed:

- Hot work, **must** be restricted, in compliance with the SIMOPS Restrictions Table in Section 6, when breaking containment.
- Work permits, if any, **must not** be issued or **must** be withdrawn if the work is in close proximity to a work site that has the potential to ignite hydrocarbons.

**Blinding preparations**

Blinding may be conducted as part of the isolation activity and controlled by the isolation control certificate (i.e. no permit). All JSA and checklist requirements still apply in these cases. In most cases, the blinding process is as follows:

- An initial $ICC_1$ is processed by the Isolating Authority for the required isolations to enable draining and depressurizing of the equipment or system so that blinds can be safely installed.
- A separate $ICC_2$ for blinding is created, the initial $ICC_1$ for the isolations that are *"In Place"* is linked to the Critical Work Permit for the job to blind the equipment. Future permitted activities relying on these blinds to be "*In Place*" would be linked to $ICC_2$.
- The Blinds List ($ICC_2$) and marked-up piping and instrumentation drawings (P&IDs) **must** be included in the Permit Pack to clearly identify where the blinds or spades are to be installed.

  ! **IMPORTANT:** When preparing the blinding plan, existing blinds or spades **must** be field verified and included on the ICC.

- Blinds or spades **must** be installed as close as possible to the equipment to be worked on.
- The exact location for installation of a spade or blind needs to be identified by tagging each flange.

  ▲ **CAUTION:** Splitting the flange on the wrong side of an isolation valve that has not been drained and depressurized can result in an uncontrolled hydrocarbon release.

- The blinding plan **must** be approved by the Area Authority before execution.
- The Area Authority **must** approve any changes to the Blinds ICC or the blinding plan after initial approval. Any working copies of the marked-up P&IDs, the Blinds ICC, or the blinding plan **must** be updated or replaced.

Figure 4-8 Blinds ICC

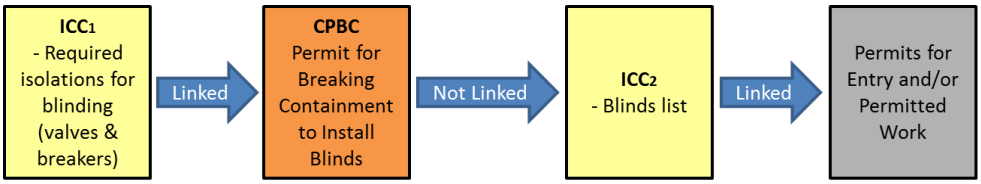


*Continued*

DocuSign Envelope ID: DBC83A32-C98A-4963-9E1E-44593247DA33



## Blinding, Continued

**Blinding priority**

When blinds are installed, the order in which this is done is important. Pressure safety valves (PSVs) should be the last to be blinded in case of an unforeseen event or delay. Blinding priority should be listed in the blinding and deblinding plan, and should be listed on the blinding tag.

The priority is as follows:

- **Major lines:** Blinding eliminates the risk of leakage from high-pressure or high-volume sources. Examples are inlet and outlet, suction, or discharge lines.
- **Secondary lines:** Blinding eliminates medium-pressure or medium-volume sources. Examples are recycle, bypass, purge, and drain lines.
- **Minor lines:** Includes instrument lines, sample points, and so forth.
- **Pressure safety valves:** Blinding PSVs last enables maximum vessel protection during other isolation activities.
  - ▲ **CAUTION:** PSVs fitted with pilot valves can backflow if flare header pressure increases and the pilot operates while the vessel is depressurized. Ensure that the upstream valve (vessel side) is closed or pilot valve sensing line is isolated before breaking containment.

*Continued*

DocuSign Envelope ID: DBC83A32-C98A-4963-9E1E-44593247DA33



## Blinding, Continued

**Blinding precautions**

The precautions regarding blinding are as follows:

- All blinds that could be or will be exposed to system pressure **must** be full system-pressure rated.
- To avoid personal injury during the opening of a flange, always proceed as if the pipe were under pressure. Appropriate precautions **must** be taken, including:
- When splitting flanges for blinding or deblinding, the best practice for breaking containment **must** be followed (the bolts farthest away from the Technician should be loosened first and the flange parted to check for gas or liquids under pressure).

  **Reference:** Section 4.5.3, "Breaking Containment"

- Non-spark tools (e.g. hydraulic) **must** be used for the breaking of flanges when there is a potential for hydrocarbons to be released.
- Hot work, **must** be restricted, in compliance with the SIMOPS Restrictions Table in Section 6, when breaking containment.
- Confined space entry in the vicinity **must** comply with the SIMOPS restrictions when breaking containment.
- Correct PPE **must** be worn.
- Spill containment **must** be in place when there is the potential for liquids to be present.

! **IMPORTANT:** A slight, inert gas purge should be considered to exclude the ingress of air until all blinds are installed or removed. This may require breathing apparatus to be worn if working in a confined area where asphyxiation could occur.

- Any relevant heat tracing or cathodic protection **must** be electrically isolated to prevent spark potential.
- The Area Operator or designated competent person **must** be present, when the first flange in a system is to be unbolted, to monitor and confirm that the system is drained and depressurized. The Area Operator **must** be consulted whenever there is any doubt (identification is not visible) as to which flange to break to insert a spade or blind.
- The Area Operator identifies and remains in attendance for breaking of any flanges that are suspected of containing any fluids due to insufficient or inadequate drain valves. Required PPE is worn and adequate spill containment is provided before commencing to unbolt these flanges.
- Where Grayloc® flanges are used, bolts **must not** be removed until the clamp can move freely before removing the bolts and nuts.
- All valves and flanges to be blinded **must** be identified with tags indicating their sequence in the de-isolation process, when the sequence is important e.g. PSVs de-blinded first.

*Continued*

DocuSign Envelope ID: DBC83A32-C98A-4963-9E1E-44593247DA33



## Blinding, Continued

**Blinding precautions,** continued

- The Area Operator **must** confirm that all blinds have been installed, bolts are tensioned (flange complete tape), and checked off on the ICC.

  ▲ **CAUTION:** The Area Operator **must not** *Issue* permits for work or entry, relying on the blinds for isolation, until all blinds are verified as *in place.*

- If there is suspicion or indication of any gas or liquid pressure in the pipe, bolts **must** be retightened immediately to seal the flange. The Area Operator **must** investigate the reason for the pressure or liquids and ensure that the system is not under pressure before work recommences.
- If there is no bleed valve between the blind or spade and the isolation valve, then a vented spade, blind, or venting ring should be installed to allow for depressurizing the spool and performing blind removal later, if the isolated valve leaks.

  If the ability to vent cannot be provided, a JSA for the safe removal of the specific blind/spade is to be documented to address the potential hazards between the valve and blind/spade (for example, liquid, gas, pressure, temperature, $H_2S$, or other hazards).
- All blinds and spades installed **must** be cleaned and fitted with new gaskets on the pressure side to ensure effective sealing, should pressure build up behind it due to valve leakage.

  Note: Old gaskets in good condition may be used on the non-pressure side to protect the flange faces.

- All flange bolts **must** be fitted and tightened to the appropriate torque.
- The area **must not** be left unattended while flanges do not have their integrity restored (new gaskets installed and bolts torqued). The person in attendance is required to know the correct action to take if a leak occurs.

**Blind fabrication**

Blinds and spades that may be subjected to process pressure (due to leaking valves or inadvertent opening of a valve) **must** be certified and compatible with the process fluids and with a design pressure and temperature at least equal to that of the vessel or piping in which they are installed.

*Continued*

DocuSign Envelope ID: DBC83A32-C98A-4963-9E1E-44593247DA33



## Blinding, Continued

**Plugs**

The following precautions **must** be taken during the use of plugs (inflatable or mechanical expansion type):

- A Job Safety Analysis (JSA) **must** be carried out when a plug is to be used.
- The plug **must** be checked before use.
- Adequate venting of the system **must** be confirmed to avoid pressure buildup behind the plug.
- During hot work, there **must** be a continuous flow of inert gas from the plug to the relief point, which **must** be located at a safe distance from the hot work location.
- The pressure behind the plug **must** be continuously monitored.
- Personnel **must not** be located in front of the pipe end where the plug is installed, in case it is ejected (line of fire).
- A barrier provided by a plug is not as secure as a blind and **must** be risk assessed to ensure that preventative and mitigative steps are identified and implemented to provide an acceptable hydrocarbon barrier and protect against ejection or leakage.

  ▲ **CAUTION:** This is a hazardous activity that **must** be mitigated by skilled, experienced and competently trained supervision.

**Permanent blinds**

When blinds or spades are installed to segregate sections of plant no longer in use, or not being used in the original configuration, they are fitted for long or indefinite periods and their position **must** be adequately documented and identified.

All permanent blinds and spades should be entered into the Permit to Work System as a long-term isolation until permanently marked on the P&IDs.

DocuSign Envelope ID: DBC83A32-C98A-4963-9E1E-44593247DA33



## 4.5.5 Hydrocarbon Freeing

**Introduction**

This section provides guidelines to protect personnel and equipment when performing hydrocarbon freeing.

At this stage of the facility isolation process, hydrocarbon freeing is intended to eliminate as much hydrocarbon liquid and vapor from the isolated facility system as can be done before breaking containment.

> ! **WARNING:** Facility systems, vessels, tanks, or piping that could contain iron sulfide (FeS), which is a pyrophoric substance, **must** be kept damp at all times, even when equipment is hydrocarbon freed. These deposits are a possible source of auto-ignition and capable of producing sulfur dioxide ($SO_2$). .

**Hydrocarbon Freeing Required:**

- Hot Work or Confined Space Entry activities
- Breaking Containment of facility systems and equipment that have large volumes and/or complex components e.g. exchangers, compressors, tanks, vessels, turbines and pipelines
- Breaking Containment of facility systems and equipment that have higher risk of ignition or release of hazardous substances e.g. iron sulfide, acid gas, toxic $H_2S$ levels, etc.

**Hydrocarbon Freeing Discretionary:**

- Breaking containment activities on “small volume process components” when the risk presented by an inadvertent hydrocarbon release to atmosphere (with or without ignition) or ignition of the combustible mixture within the equipment can be reduced to ALARP.

  **Example: “Small volume process components:”** Small filters and pumps, flame arrestors, meters, instrument piping/tubing, small bore pig launcher/receiver and short runs of process piping when replacing the spool, valves, corrosion probes, coupons or orifice plates.

- Where hydrocarbon freeing activities would present additional hazards and increased risk

**Additional Precautions When NOT Hydrocarbon Freeing:**

- SIMOPS restrictions for hydrocarbon source activities
- No flame or spark generating tools or equipment will be used at, or near the work site
- Gas testing for toxic and flammable conditions is conducted and required PPE is worn
- Fire and gas detection equipment in the vicinity **must** be in service or mitigated

*Continued*

DocuSign Envelope ID: DBC83A32-C98A-4963-9E1E-44593247DA33



## Hydrocarbon Freeing, Continued

**Goal**

The goal of hydrocarbon freeing prior to breaking containment is to attain a hydrocarbon concentration of zero or, if this is not possible, less than 4% hydrocarbons by volume in an inert atmosphere (e.g. N2).

> ! **IMPORTANT:** Hot Work activities **must** achieve zero percent hydrocarbons in an inert atmosphere (0% of LEL).

Hydrocarbon freeing activities are conducted with inert mediums such as nitrogen, water or steam to avoid a flammable gas-air mixture when passing through the LEL-UEL range.

**Prerequisites**

Prior to hydrocarbon freeing, the equipment and piping involved **must** be successfully isolated, drained, and depressured.

**Methods**

There are various methods that can be used to free equipment of hydrocarbons. They are as follows:

- Water flushing or flooding
- Inert gas purging with nitrogen ($N_2$) or carbon dioxide ($CO_2$)
- Steaming
- Hot water circulation with filtering

> ! **IMPORTANT:** Waste collection and disposal methods **must** be implemented before commencement.

*Continued*

DocuSign Envelope ID: DBC83A32-C98A-4963-9E1E-44593247DA33



## Hydrocarbon Freeing, Continued

**Planning hydrocarbon-freeing activities**

The following guidelines should be used to plan hydrocarbon-freeing activities:

- The complexity and risks associated with the activities should be used to determine if a job-specific plan should be prepared. Job planning should consider the following:
  - The method/technique to be used for hydrocarbon freeing the equipment.
  - Special conditions that should be established before the hydrocarbon-freeing is commenced.
  - Step-by-step activities to be performed.
  - Facility critical operating parameters (pressures, temperatures, capacities) that should not be exceeded.
  - Any required temporary defeats of critical devices, and when critical devices may be reinstated.
  - The means to monitor the progress of the preparation and confirm its successful completion.
  - The fluids to be drained and a review of the appropriate Safety Data Sheets (SDS).
  - A Task Hazard Assessment (THA) of the activities and risk mitigation measures.
  - Spill containment and waste disposal that might be required.
  - Additional personal protective equipment (PPE) required.
  - Emergency or abnormal operating procedures.
- Obtain a Critical Work Permit for Breaking Containment for any activities that involve venting hydrocarbons to the atmosphere other than through approved drain, vent, or flare systems. A permit is not required for an AO conducting these activities as part of their normal duties.
- Confirm that the vessel or facility system is isolated, depressurized, and drained of process fluids.

*Continued*

DocuSign Envelope ID: DBC83A32-C98A-4963-9E1E-44593247DA33



## Hydrocarbon Freeing, Continued

**Hydrocarbon-freeing safety precautions**

Use the following safety precautions when hydrocarbon-freeing systems:

- Appropriate PPE **must** be worn to protect against hazards specific to flushing and purging. These include:
  - Increased eye protection (such as goggles or face mask) when bleeding down equipment.
  - **Breathing apparatus** - the conditions (confined area, where asphyxiation could occur) and state of the equipment to be broken (i.e. whether the equipment may contain toxic substances such as $H_2S$, hydrocarbons or benzene) will determine if breathing apparatus will be required.

    ! **WARNING**: Inert gas used for purging may not be toxic; however, appropriate precautions **must** be taken when bleeding down large volumes of inert gas, to prevent asphyxiation due to displacement of the oxygen.

- In order to prevent auto-ignition, vessel internals **must** be kept wet if pyrophoric iron sulfides are suspected to be present and air will be introduced.
- The introduction of water into a higher-pressure or volatile hydrocarbon system can result in the formation of hydrates and should be avoided. The use of a hydrate inhibitor should be considered if water is to be used.
- Do not use excessive force if purge or drain valves are tight. Lubricant often frees up valve stems and bushings.
- Any water introduced to vessels or systems should be treated with corrosion inhibitor to prevent future corrosion of the system.

*Continued*

DocuSign Envelope ID: DBC83A32-C98A-4963-9E1E-44593247DA33



# Hydrocarbon Freeing, Continued

Figure 4-9 Hydrocarbon Freeing Decision Process

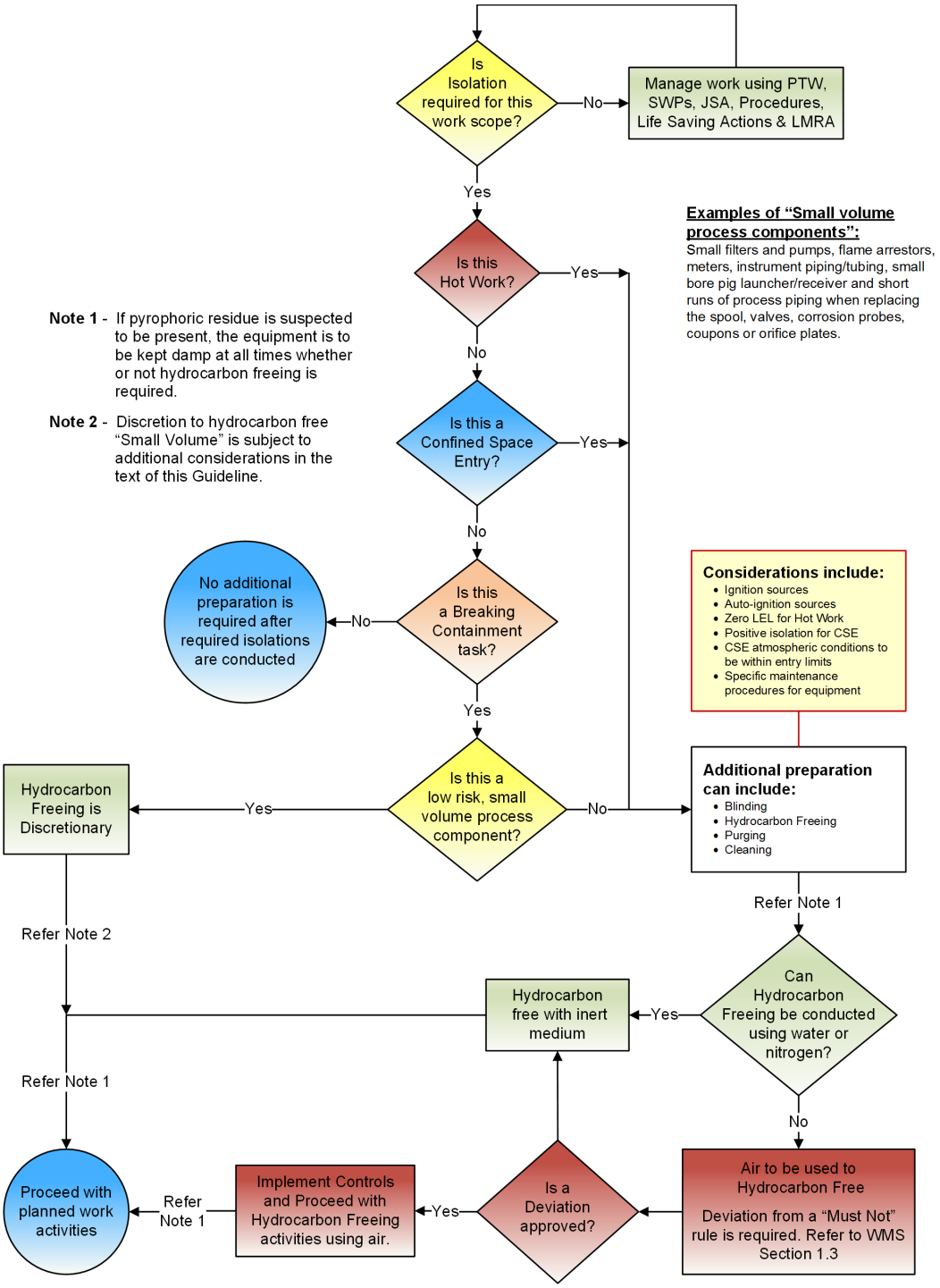


*Continued*

DocuSign Envelope ID: DBC83A32-C98A-4963-9E1E-44593247DA33



## Hydrocarbon Freeing, Continued

**Water flushing process**

This general process should be followed when flushing vessels or facility systems with water before breaking containment.

Table 4-7 General Flushing Process

| Task | Action |
|---|---|
| 1. | Before starting to fill with water, a review of the process should be made to determine:<br>▪ Whether water can be used (for example, any seals in the system)<br>▪ The level to which water can be filled:<br>– Confirm that the structural design of the process equipment and its foundation are able to withstand the extra weight of the water column.<br>– Confirm that the system to be flushed is not overpressured due to the height of the water column.<br>▪ Any high point vents that need to be opened or any drain systems to be used when draining the system to avoid a vacuum. |
| 2. | Water and detergent should be added to the base of the vessel or tank to be flushed. The preferred method for displacing hydrocarbons with water is to use a portable or fixed pump fitted with a break tank. If a hose is used, the following precautions **must** be taken:<br>▪ A break tank **must** be used to prevent contaminated water backing up into the water supply system.<br>▪ The hose **must** be secured to the fill valve to restrain the hose if the connection were to fail.<br>▪ Hoses **must** be electrically bonded.<br>▲ **CAUTION:** Never use hoses to connect utility or fire systems directly to vessels or pipework, to avoid the potential of hydrocarbons entering these safety systems. |
| 3. | The level in the vessel **must** be monitored with a level or pressure gauge. |
| 4. | Pressure **must** be vented from the top of the vessel to a flare or vent system. |

*Continued*

DocuSign Envelope ID: DBC83A32-C98A-4963-9E1E-44593247DA33



## Hydrocarbon Freeing, Continued

Table 4-7 General Flushing Process, continued

| Task | Action |
|---|---|
| 5. | After the equipment is filled, drain the water to the closed drain system or other appropriate location.<br>▲ **CAUTION:** Water used to flush a vessel or tank will be contaminated. Waste collection and disposal methods **must** be implemented before commencement of the draining phase of the process.<br>▲ **CAUTION:** Avoid overfilling the closed drain system.<br>▲ **CAUTION:** Make sure there is sufficient venting of the system to avoid under pressure or a vacuum while draining. This venting should not be allowed to pull air into the system unless all hydrocarbons have been previously displaced. Nitrogen ($N_2$) or another inert gas **must** be used to displace any hydrocarbon vapors near the top of the vessel. Nitrogen should also be used to maintain positive pressure while the system or vessel is being drained.<br>! **WARNING:** Water flooding may not remove sludge or oils trapped in pipes or vessel internals. Flooding with water **must not** be relied upon to remove all hydrocarbon traces. |

*Continued*

DocuSign Envelope ID: DBC83A32-C98A-4963-9E1E-44593247DA33



## Hydrocarbon Freeing, Continued

**Inert gas purging**

Purging replaces combustible hydrocarbon gases with an inert gas such as nitrogen ($N_2$) or carbon dioxide ($CO_2$), or a combination of both.

> ! **WARNING:** When purging with inert gas, provision **must** be made to prevent the maximum allowable working pressure (MAWP) of the equipment or system from being exceeded. Relief capability **must** be in place in case the nitrogen pressure regulator or compressor controls fail. Temporary hoses **must** be tethered and rated for pressures that they could be exposed to if purging equipment controls fail (relief pressure).

There are two basic methods of purging with inert gases, as follows:

- **Purging by dilution:** The system or vessel is pressurized with inert gas. Do not exceed the MAWP. The inert gas and hydrocarbon mixture is then vented to a safe location. This process may be repeated several times, diluting the mixture further each time, until the vented gas is zero or, if this is not possible, less than 4% hydrocarbon (HC) by volume in an inert atmosphere.
- **Purging by displacement:** The system or vessel is purged by a flow through of nitrogen or other inert gas. High and low point vent and drain valves are opened to confirm effective purging, especially of dead legs.

  The inert gas should be injected in the top of the system when it is lighter than the hydrocarbons contained in the system and it should be injected in the bottom of the system when the inert gas is heavier than the hydrocarbons contained in the system.

  > ! **WARNING:** Purging by displacement may allow pockets of hydrocarbons to remain in vessels or pipework although the vented gas may indicate it is less than 4% hydrocarbon (HC) by volume in an inert atmosphere.

Nitrogen or inert gas purging can be effective for hydrocarbon freeing vessels and tanks in clean service (for example, LPG, LNG, light ends, fuel gas, or condensate).

The following general process should be followed when purging vessels or facility systems with nitrogen ($N_2$) or other inert gases before breaking containment or when performing hot work on pipelines or process piping.

> ! **WARNING:** Hydrocarbon freeing with air **must not** be conducted because a gas-air mixture is flammable when transitioning through the LEL–UEL range. An incident could occur if there is a spark during this period due to static (purge velocity), movement of internal components, faulty internal electrical equipment, or if FeS deposits auto-ignite.

*Continued*

DocuSign Envelope ID: DBC83A32-C98A-4963-9E1E-44593247DA33



## Hydrocarbon Freeing, Continued

**Inert gas purging**, continued

### Purging by dilution method

This method is preferred when purging large systems or vessels because it requires the usage of less inert gas and is more efficient at removing hydrocarbons, especially when the vessel being purged contains baffles, dead legs, or level bridles.

Table 4-8 Purge by Dilution Process

| Task | Action |
|---|---|
| 1. | The $N_2$ or inert gas hose **must *not*** be connected to the system before draining and depressuring the vessel or system. |
| 2. | The system or vessel to be purged is properly isolated, drained, and depressured.<br>**Reference:** "General flushing process" described previously in this section. |
| 3. | Connect the inert gas hose to a low point drain. |
| 4. | Pressurize the system or vessel but do not exceed the maximum allowable working pressure (MAWP).<br>▲ **CAUTION:** The MAWP of any system or vessel should be no higher than 95% of the set point pressure of the PSVs. |
| 5. | Vent the inert gas and hydrocarbon vapors to a safe location as quickly as possible; that is, through the largest vent valve available.<br>! **WARNING:** If venting to atmosphere, consider restricting access to the area where inert gas is being vented to prevent asphyxiation. |
| 6. | Test the hydrocarbon (HC) content of the gases as they are being vented. The pressure and pop (pressure/depressure dilution) method **must** be repeated until the HC concentration is less than 4% by volume in the inert atmosphere.<br>▲ **CAUTION:** Some HC monitoring devices do not measure accurately in an oxygen-deficient atmosphere; specialized equipment may be required. |
| 7. | After purging is complete, it is important to confirm that hydrocarbons or other combustible materials are prevented from re-entering the purged equipment. |

*Continued*

DocuSign Envelope ID: DBC83A32-C98A-4963-9E1E-44593247DA33



## Hydrocarbon Freeing, Continued

**Inert gas purging**, continued

### Purging by displacement method

This method may be preferred in some situations when the desired pressure cannot be attained with the inert gas or when performing hot work. For example, a slow continuous nitrogen purge can be advantageous when welding on a pipeline.

Table 4-9 Purge by Displacement Process

| Task | Action |
|---|---|
| 1. | The $N_2$ or inert gas hose **must not** be connected to the system before draining and depressuring the vessel, facility system, or pipeline. |
| 2. | Connect the inert gas to a low drain point and begin $N_2$ injection.<br>! **WARNING:** Purging by displacement may allow pockets of hydrocarbons to remain in the vessels or pipework although the vented gas may show less than 4% HC in an inert atmosphere.<br>! **WARNING:** Consider restricting access to the area where inert gas is being vented to prevent asphyxiation.<br>When flushing a large system, connect a vent hose to a high-point vent or open vent valve to flare in the isolated system as far away as possible from the inlet injection point. |
| 3. | Excessive purge rates should be avoided to prevent localized freezing of valves, gauges, and other equipment.<br>! **IMPORTANT:** Monitor the pressure to avoid unintended pressure buildup due to leaks from associated live systems.<br>! **WARNING:** Where entry into a confined space is planned, the inert gas **must** be subsequently purged from the space with air to meet the confined space entry atmospheric limits/thresholds, even if breathing apparatus is to be used.<br>**Reference:** Section 3.4, "Confined Space Entry" |
| 4. | Test vented gas with a certified instrument designed to read HC content in an oxygen-deficient atmosphere, to confirm that the content of HC is less than 4% by volume.<br>▲ **CAUTION:** Some flammable vapor monitoring devices do not measure accurately in an oxygen-deficient atmosphere; specialized equipment can be required. |
| 5. | When purging is complete, confirm that hydrocarbons and other combustible materials are prevented from re-entering the purged equipment. |

*Continued*

DocuSign Envelope ID: DBC83A32-C98A-4963-9E1E-44593247DA33



## Hydrocarbon Freeing, Continued

**Steaming process**

Steaming is the most effective means of removing residual hydrocarbons from vessels in crude or other heavy hydrocarbon service.

The facility system or vessel is purged with steam from the facility's own steam heat medium system or from a portable steam generator. High and low point vent and drain valves are opened to confirm effective purging of residual hydrocarbons, especially from dead legs and level bridles.

Table 4-10 Steaming Process

| Task | Action |
|---|---|
| 1. | The nozzle of the steam hose **must** be bonded to the facility system or vessel and grounded (earthed) to decrease or prevent the generation of static electricity. |
| 2. | The boiler operator **must** be in attendance at the steam generator at all times.<br>! **WARNING:** During steaming, the boiler attendant **must** attend the steam generator at all times. In the event of the steam generator shutting down and being unable to restart quickly, adequate vents should be opened in the vessel immediately to avoid forming a vacuum in the system as it cools. |
| 3. | If oxygen is present in the facility system or vessel, steam temperatures **must not** exceed the auto-ignition temperature of the previously stored hydrocarbons. |
| 4. | ▲ **CAUTION:** Consider coating and insulation properties when steaming vessels and systems—for example, where the vessel is insulated with polyurethane foam, the temperature **must not** exceed 176°F (80°C) to prevent damage to the insulation. |
| 5. | When a vessel is being steamed for confined space entry, the temperature of the confined space **must** be cooled to an acceptable thermal environment prior to entry.<br>**Reference:** Section 3.4, "Confined Space Entry" |
| 6. | Waste generated as a result of steam cleaning should be collected, labeled, and disposed of as required by the *Waste Management Manual*. |
| 7. | After steaming, process equipment **must** be adequately vented during cool-down to prevent the formation of a vacuum on the vessel being steamed. |

*Continued*

DocuSign Envelope ID: DBC83A32-C98A-4963-9E1E-44593247DA33



## Hydrocarbon Freeing, Continued

**Steaming process**, continued

### Steaming Strips

To confirm adequate purging or steaming of equipment, blinds or spades are sometimes vented on the isolated equipment side to confirm that dead legs, created by blinding, are adequately purged or steamed. Steaming strips (standoffs) or grooved blinds are used to achieve this.

Steaming strips should not be used at locations where pressure can build up behind the blinds, because they may not allow the replacement of all flange stud bolts and even tensioning of stud bolts. The preferred option in these situations is to fit line-rated, grooved blinds or spades, specifically designed and fabricated for this purpose.

The locations of the steaming strips should be recorded on an ICC.

**Reference:** Section 4.5.4, "Blinding"

Note: Steaming strips should only be made of soft metal such as aluminum to avoid damage to the gramophone surfaces of flange faces.

! **WARNING:** Steaming strips **must** be removed, gaskets installed, and bolts tensioned before the start of confined space entry, to exclude the potential for toxic vapors to enter the space through these gaps.

▲ **CAUTION:** When using this method for cleaning a vessel or system, a vent of adequate size **must** remain open on the vessel to prevent the formation of a vacuum, if the steaming unit shuts down and the system cools.

*Continued*

DocuSign Envelope ID: DBC83A32-C98A-4963-9E1E-44593247DA33



## Hydrocarbon Freeing, Continued

**Hot water circulation process**

The facility system or vessel is filled with a mixture of water and detergent. The unit takes suction from the vessel/system and discharges back into the same vessel/system.

The soapy water mixture is continually heated and filtered to remove the hydrocarbon solids until the system or vessel is clean.

This method is preferred when preparing a vessel for entry that is known to have considerable quantities of solids mixed with hydrocarbons (for example, a three-phase production separator in a field that produces from a sandy formation or containing heavy oil).

Note: The unit typically requires dual filter installations to allow for filter cleaning due to the large amounts of hydrocarbon solids being removed from the vessel.

**Reference:** Section 3.4, "Confined Space Entry"

Table 4-11 Hot Water Circulation Process

| Task | Action |
|---|---|
| 1. | The suction and discharge hoses of the hot water unit **must** be bonded to the facility system or vessel and grounded (earthed) to decrease or prevent the generation of static electricity. |
| 2. | If oxygen is present in the facility system or vessel, water temperatures **must not** exceed the auto-ignition temperature of previously stored hydrocarbons.<br>▲ **CAUTION:** When using this method for cleaning a vessel or system, a vent of adequate size **must** remain open on the vessel to prevent the formation of a vacuum, if the hot water unit shuts down and the system cools.<br>▲ **CAUTION:** Consider coating and insulation properties when heating vessels and systems with hot water—for example, where the vessel is insulated with polyurethane foam, the temperature **must not** exceed 176°F (80°C) to prevent damage to the insulation. |
| 3. | When a vessel is being cleaned for confined space entry, the temperature of the confined space **must** be cooled to an acceptable thermal environment prior to entry.<br>**Reference:** Section 3.4, "Confined Space Entry" |
| 4. | Waste generated as a result of cleaning is collected, labeled, and disposed of as required by the Production Unit's *Waste Management Practices*. |

DocuSign Envelope ID: DBC83A32-C98A-4963-9E1E-44593247DA33



## 4.5.6 Cleaning

**Introduction**

This section provides guidelines to protect personnel and equipment when cleaning hydrocarbon-containing equipment.

Some flushing and purging may have been performed before breaking containment. However, residual hydrocarbons can remain that **must** be removed by cleaning.

**Methods of hydrocarbon cleaning**

Methods of cleaning residual hydrocarbons are:

- Hydroblasting (normally requires vessel entry)
- Mechanical cleaning (normally requires vessel entry)

The exact method used depends on:

- The configuration of the equipment
- The nature of the fluids

**Goal**

The goal of cleaning is to achieve a hydrocarbon concentration of zero or, if this is not possible, less than 4% by volume.

! **WARNING:** If the cleaning requires vessel entry, confined space entry requirements regarding atmospheric limits **must** be followed.

**Reference:** Section 3.4, "Confined Space Entry"

**Prerequisites**

Prior to cleaning, the equipment and piping involved **must** be successfully isolated, depressurized, drained, and hydrocarbon freed (to the extent possible).

**References:**

- Section 4.5.1, "Energy Isolation and Isolation Control Certificate"
- Section 4.5.2, "Draining and Depressurizing"
- Section 4.5.5, "Hydrocarbon Freeing"

! **WARNING:** Cleaning occurs after breaking containment when an oxygen atmosphere could coexist with hydrocarbons. Appropriate precautions **must** be taken.

*Continued*

DocuSign Envelope ID: DBC83A32-C98A-4963-9E1E-44593247DA33



## Cleaning, Continued

**Planning cleaning activities**

The following guidelines should be used to plan cleaning activities.

- The complexity and risks associated with the activities should be used to determine if a job-specific plan should be prepared.
- Job planning should consider the following:
  - Special conditions that should be established before the process is commenced
  - Step-by-step activities to be carried out
  - Facility critical operating parameters (pressures, temperatures, capacities) that should not be exceeded
  - Any required temporary defeats of critical devices, and when critical devices may be reinstated
  - The means to monitor the progress of the preparation and confirm its successful completion
  - Fluids to be vented and a review of the appropriate Safety Data Sheets (SDS)
  - A Task Hazard Assessment of the activities to identify risk mitigation measures
  - Spill containment or waste disposal techniques that might be required
  - Additional personal protective equipment (PPE) required
  - Emergency or abnormal operating procedures
- Obtain the required work permit for the cleaning work to be done.
- Hydrocarbons can then be removed from vessels and process systems by any one, or by a combination, of the following techniques:
  - Hydroblasting
  - Mechanical cleaning

**Dead legs**

Dead legs where liquid hydrocarbons can collect **must** be considered when cleaning facility systems. Dead legs are created by:

- Weirs and standpipes in vessels
- Instrument bridles and sight glasses
- Low points in pipework

Dead legs that cannot be drained or cleaned should be isolated, if practicable.

*Continued*

DocuSign Envelope ID: DBC83A32-C98A-4963-9E1E-44593247DA33



## Cleaning, Continued

**Hydroblasting**

Hydroblasting is required for cases where hydrocarbon deposits need mechanical force to be removed.

The following steps should be followed when hydroblasting:

- The system **must** be isolated, drained, and depressurized.
- The high-pressure water cleaning system **must** be identified (contractor or facility equipment).
- During hydroblasting, the vessel should be continuously drained. The hydroblasting equipment **must** be staged in a manner that will not interfere with the draining process.
- If entering the vessel is required:
  - All confined space entry precautions **must** be followed.
    **Reference:** Section 3.4, "Confined Space Entry"
  - Direct the hydroblasting to the equipment to be cleaned.
  - The vessel should be continuously drained and ventilated.

▲ **CAUTION:** If working in a confined space, be aware of the signs of heat stress among the workers.

! **WARNING:** Hydroblasting of hydrocarbon deposits can create a toxic level of hydrocarbon vapors.

**Cleaning safety precautions for hydroblasting**

Use the following safety precautions when hydroblasting equipment:

- Appropriate PPE **must** be worn to protect against hazards specific to hydroblasting.
- Hydroblasting lines and fittings **must** be properly grounded (earthed) to prevent static electricity generation.
- All potential spills **must** be bunded or otherwise contained. A Task Hazard Assessment and JSA should be used to identify the need for, and type, of any spill response equipment.
- Residue from hydroblasting (including spilled fluids) **must** be collected and disposed of in accordance with the *Waste Management Manual*. The SDS for any contaminants should be consulted.
- Care **must** be taken not to exceed the maximum temperature of vessels. Temperature limits may exist because of:
  - Nature of the internals or any catalyst materials
  - Expansion of pipework and resultant stresses
  - Insulation materials
  - Vessel metallurgy
- Steam temperatures **must not** exceed the auto-ignition temperature of process fluids, if oxygen is present.

*Continued*

DocuSign Envelope ID: DBC83A32-C98A-4963-9E1E-44593247DA33



## Cleaning, Continued

**Mechanical cleaning**

It is sometimes necessary to enter process equipment to remove sludge or scale to completely free the equipment of hydrocarbons. Mechanical cleaning methods include scraping, brushing, vacuuming, and so on.

> ! **IMPORTANT:** Entering a vessel is not the preferred method of cleaning. It should only be done when other methods are impractical or ineffective.

The following steps should be followed when mechanically cleaning:

- Plan the method for removing the cleaning medium and cleaning debris from the vessel. Do not allow excessive amounts of debris to accumulate within the vessel.
- Plan and follow all of the precautions required for confined space entry.
  **Reference:** Section 3.4, "Confined Space Entry"

  > ! **WARNING:** When cleaning hydrocarbons from a confined space, continuous hydrocarbon gas monitoring is essential.

  > ! **WARNING:** Hydrocarbon vapors can be released when sludge is disturbed or heated. Sludge containing heavy hydrocarbons (heavier than kerosene) can release ignitable vapors that may not be detected by gas detectors.

- Plan and follow all precautions required for the cleaning method(s) to be used.

  > ! **WARNING:** Static electricity hazards **must** be eliminated when mechanically cleaning vessels.

- Plan and follow all precautions for naturally occurring radioactive material (NORM) and pyrophoric scale.
- The vessel **must** be continuously drained and ventilated.

DocuSign Envelope ID: DBC83A32-C98A-4963-9E1E-44593247DA33



# 4.6 Reinstating Facility Systems and Equipment

**Introduction**

This section provides guidelines to be followed when reinstating equipment and facilities and defines personnel responsibilities. The general sequence of events, when reinstating equipment and facilities, is as follows:

- Recommissioning

  Note: Recommissioning is an activity that takes place throughout the reinstatement. Mechanical completion checks must be made before and after equipment testing, air freeing, leak testing, and de-isolating.

- Equipment testing
- Air freeing
- Leak and pressure testing
- Removing energy isolations (mechanical, electrical, instrument)
- Removing temporary defeats
- Acceptance testing

! **IMPORTANT:** Each job should have its own reinstatement plan that includes detailed activity instructions, the order in which activities are to be performed, and any special precautions that should be taken during each step.

**Conflicting work**

Facility reinstatement activities involve two types of conflicts:

- Potential for hydrocarbon release
- High level of work activity and congestion in the area

Refer to Section 6, "Simultaneous Operations" for guidance on other activities that are restricted during reinstatement activities.

*Continued*

DocuSign Envelope ID: DBC83A32-C98A-4963-9E1E-44593247DA33



## Reinstating Facility Systems and Equipment, Continued

**Planning reinstatement activities**

The following guidelines should be used to plan reinstatement activities.

- The complexity and risks associated with the activities should be used to determine if a job-specific plan should be prepared. Job planning should consider the following:
  - Risk Assessment
  - Emergency procedures/process
  - Barrier requirements
  - Protection of sensitive equipment
  - Order of the steps required to reinstate equipment
  - Appropriate PPE for each step
  - Checklist of equipment status for each step
  - Marked-up piping and instrumentation drawing (P&IDs) showing existing isolations, drain, fill, and pressure testing points
- Identify any required equipment testing.

  ! **IMPORTANT:** This can involve temporarily removing some isolation for the test. After the test, a checklist should be used to re-isolate as required. Purge air from hydrocarbon systems with water or an inert gas such as nitrogen ($N_2$) or carbon dioxide ($CO_2$).

- Leak and pressure test equipment or facilities where pressure integrity was broken.

  ! **IMPORTANT:** Recommissioning checks should take place again before leak and pressure testing the facility system.

- Remove mechanical isolations and the locks and tags put in place for this work only.

  ! **IMPORTANT:** Recommissioning checks should take place again before restarting the facility system.

- Perform any required acceptance test of new or repaired equipment.
- Remove the temporary defeats of critical devices.

DocuSign Envelope ID: DBC83A32-C98A-4963-9E1E-44593247DA33



## 4.6.1 Recommissioning

**Introduction**

Recommissioning is the process of confirming the fit-for-purpose state of the system before it is air freed, leak tested, and put back into service.

**Planning recommissioning activities**

The following guidelines should be used to plan recommissioning activities.

- Job planning should consider the following:
  - Scope and nature of the facility system worked on
  - The P&IDs (that were confirmed to be accurate by walking the lines) and the electrical diagrams
  - The need for communications to be established with other activities, or any other activity interfaces
  - The deisolation and reinstatement of equipment
  - Step-by-step activities to be carried out
  - A mechanical completion checklist

  ! **IMPORTANT:** Separate plans for performing recommissioning checks should be prepared as follows:

    - Before purging
    - Before leak and pressure testing
    - Before putting the facility or equipment back into service

*Continued*

DocuSign Envelope ID: DBC83A32-C98A-4963-9E1E-44593247DA33



## Recommissioning, Continued

**Potential recommissioning hazards**

Time **must** be taken to inspect the facilities and equipment. The following hazards may be present:

- Faulty valves (that were worked on and not function-tested)
- Valves that are in the wrong position
- Blocked bleed lines or drains
- Plugs removed from bleed or drain valves
- Faulty gauges
- Missing or improperly torqued flange bolts
- Missing gaskets or plugs
- Small valves open to atmosphere or drain
- Analyzer inlet/outlet lines that have not been reconnected
- Small bore piping that is not reconnected
- Instrument sensing lines that are not recommissioned
- Control or safety systems not put back in service
- Level glasses not being returned to service with the valves fully open (so that the blowout preventers can work if the glass breaks)
- Electrical connections that are not reestablished
- Physical guards for rotating equipment that are not replaced.
- Incorrect, incompatible, or improperly pressure-rated materials used.
- Flanges that had been split, not being tightened to the correct torque.

**Introducing pressure**

Take the following precautions when introducing pressure back into the facility system:

- Introduce pressure slowly to prevent pressure or temperature shocks to the system.
- Check all flanges that have been disturbed, manways, pump or compressor seals, or other fittings for leaks as pressure is increased, or as temperature is raised or lowered.
- Install a plug or blind on valves that are single block valve isolation between the hydrocarbon process and atmosphere.
- Compressor and pump seal oil systems **must** be operating when any pressure is introduced. The discharge pressures should be increased slowly once the machine is running and leak checks conducted on the discharge piping.
- Exchangers and reboilers do not reach operating temperatures until they are in service. The temperature should be increased slowly while checking for leaks.

*Continued*

DocuSign Envelope ID: DBC83A32-C98A-4963-9E1E-44593247DA33



## Recommissioning, Continued

**Critical devices**

If work was performed on any associated critical devices or systems while equipment was out of service, the critical devices or systems **must** be function-tested when the equipment is returned to service to confirm correct operation.

**Removing blinds and spades safety precautions**

Blinds and spades may have pressurized fluids that have built up behind them due to leaking isolation valves. Consider the following safety precautions when removing blinds and spades:

- If possible, bleed any potential pressure through drain valves or vented spades.
- Appropriate PPE **must** be worn to protect against hazards specific to draining and depressurizing. These include:
  - Increased eye protection (for example, goggles or face mask) when breaking containment.
  - The conditions (confined area, where asphyxiation could occur) and state of the equipment to be broken (i.e. whether the equipment may contain toxic substances such as $H_2S$, hydrocarbons or benzene) will determine if **breathing apparatus** will be required.
- Generally, deblinding should be done in the following order:
  - Vessel or tank manways to be restored
  - Pressure safety valve (PSV) blinds
  - Minor line blinds
  - Secondary line blinds
  - Major line blinds
  - Hot work **must** be restricted, in compliance with the SIMOPS Restrictions Table in Section 6, because connections can leak flammable liquids or gases.
  - The Area Operator **must** confirm (witness) that all blinds are removed and check them off on the Blinds List.
  - All potential spills **must** be bunded or otherwise contained. A Risk Assessment should be used to identify the need for, and type of, any spill response equipment.

  ! **WARNING:** Any spilled process or utility fluids **must** be disposed of in accordance with the *Waste Management Manual*. The SDS for any contaminants should be consulted.
  - When blinds or spades are removed and the new joint is being reinstated:
  - New gaskets **must** be installed.
  - All flange bolts **must** be installed and tightened to the correct torque.
  - *Joint complete* tape (yellow plastic tape with "Joint Complete" in black lettering) **must** be wrapped around the flange by the person who completes the flange makeup.

  ! **IMPORTANT:** To minimize future corrosion issues, the joint complete tape **must** be removed by the Area Operator after leak testing the flange.

DocuSign Envelope ID: DBC83A32-C98A-4963-9E1E-44593247DA33



## 4.6.2 Equipment Testing

**Introduction**

Sometimes equipment **must** be test run to confirm the correct rotation of motors, seal containment, or engine operation before permits can be signed off as complete. This can require full or partial removal of energy isolations.

> Note: Some equipment testing requires the introduction of hydrocarbons. In this case, the equipment testing must be performed after air freeing.

**Planning equipment testing activities**

The following guidelines should be used to plan equipment testing activities.

The complexity and risks associated with the activities should be used to determine if a job-specific plan should be prepared.

Job planning should consider the following:

- Step-by-step activities to be performed, including:
  - Required de-isolations (process, mechanical, and electrical) and their order of execution
  - Determination of how a temporary partial or full de-isolation could affect other work groups working in the area or system (Sanction to Test)
  - Required suspension of temporary defeats of critical devices, and when critical devices may be reinstated
  - Requirements for reinstating utility systems required for the test
  - Means of introducing energy (process fluids and energy sources to prime movers)
  - How the equipment is controlled
  - Test goals and parameters
  - Means of re-isolating the system after the test
- Facility critical operating parameters (pressures, temperatures, capacities) that should not be exceeded
- The means to monitor the progress of the operations and confirm its successful completion
- Identification of any fluids involved and a review of the appropriate Safety Data Sheets (SDS)
- A Job Safety Analysis or Risk Assessment for the de-isolations and for the equipment testing
- Any personal protective equipment (PPE) required
- Emergency or abnormal operating procedures

*Continued*

DocuSign Envelope ID: DBC83A32-C98A-4963-9E1E-44593247DA33



## Equipment Testing, Continued

**Sanction to test**

The following general practice regarding equipment testing should be followed:

- The Isolating Authority (Area Operator) should request the Sanction to Test (STT) to be conducted. A plan is developed for the points to be de-isolated for testing. (Area Operator)
- The Area Authority (AA) or delegate suspends all work permits affected by the STT (permits cross-referenced to the ICC).
- Move the ICC to *Perform STT*.
- The Isolating Authority performs the de-isolations, and reinstates or removes the required temporary defeats.
- The Isolating Authority updates the work site copy of the ICC to reflect the de-isolations or updates them in ePTWS.
- The AA authorizes the permit for testing *Authorize Suspended STT*.
- The AO issues the permit for testing *Issue for STT*.
- The PH accepts the permit for testing *Accept STT*. The permit is in the ***Live STT*** state.
- The equipment testing may then begin, including the introduction of energy, according to the written equipment test, if available.
- Upon completion of the test, the equipment is then re-isolated, if further work is required, or if other permits require the isolations to be reinstated.
- Remaining isolated points can be de-isolated if the test was successful and there are no other permits requiring the isolations.

  ! **IMPORTANT:** If the test was unsuccessful and further work on the equipment is required, isolation activities (for example, hydrocarbon freeing) may be required before the equipment can be worked on.

- The Area Operator then updates the work site copy of the ICC or updates them in ePTWS.
- The Area Operator may then reissue any work permits suspended for the equipment testing when it is safe to do so.

DocuSign Envelope ID: DBC83A32-C98A-4963-9E1E-44593247DA33



## 4.6.3 Leak and Pressure Testing

**Introduction**

This section provides guidelines to protect personnel and equipment when performing leak testing of facility systems before putting them back into service.

**Goal**

Leak and pressure testing confirms that the integrity of flanges, seals, glands etc., is restored after intrusive work. The goal is the prevention of leaks where flammable or toxic fluids can affect personnel, create an ignitable atmosphere or cause environmental damage.

Leak and pressure testing prior to return to service is not required for low risk and small volume systems and equipment**:**

a) Low risk – non-hazardous, non-toxic services other than hydrocarbon service, where an inadvertent release presents no credible SHE risk e.g. potable water service, instrument air service etc.

b) Small volume - the amount of hydrocarbon or toxic product that could be released when returning to service presents minimal risk of asphyxiation, toxicity or ignition. Additional mitigating measures **must** be implemented to reduce risk to ALARP (refer to decision process diagram)

**Example: "Small volume process components"**: Small filters and pumps, flame arrestors, meters, instrument piping/tubing, small bore pig launcher/receiver and short runs of small bore process piping when replacing the spool, valves, corrosion probes, coupons or orifice plates.

**Pre-requisites**

Prior to testing all applicable recommissioning checks **must** be completed, e.g. mechanical completions checks, joint complete tape etc.

**Reference:** Section 4.6.1, "Recommissioning"

Prior to testing, appropriate test pressures and durations need to be determined.

**Testing guidance**

**Leak test:**

A leak test is an initial low pressure test to identify obvious system integrity deficiencies e.g. missing gaskets or plugs, open vents or drains, missing or loose flange bolts, disconnected analyzer or instrument tapping points, etc.

Leak testing should be conducted at a low pressure, establish a leak test duration appropriate to the volume/complexity of the system/equipment being tested.

Pressure should be introduced slowly to avoid a large release of the pressurizing medium. Hold at test pressure and monitor for any fall in pressure, check all disturbed flanges and fittings.

*Continued*

DocuSign Envelope ID: DBC83A32-C98A-4963-9E1E-44593247DA33



## Leak and Pressure Testing, Continued

**Testing guidance**, continued

**Pressure test (tightness test):**

Pressure testing establishes that the system integrity is restored to normal operating pressure and any deficiencies are identified e.g. leakage at flanges and joints, valve packing, screwed connections and instruments etc.

Pressure testing is conducted to the normal operating pressure anticipated in that part of the system and should not exceed 90% of the pressure relief valve set point or 90% of the MAWP of the system.

Establish a pressure test duration appropriate to the volume/complexity of the system/equipment being tested. Pressure should be introduced slowly to avoid a large release of the pressurizing medium. Hold test pressure and monitor for any decrease in pressure, check all disturbed flanges and fittings.

> Note: In instances where the potential for equipment damage during pressure testing exists (e.g. seal damage/failure on a compressor or pump), the test pressure must not exceed equipment tolerances (e.g. suction pressure). Normal operating pressures will be reached when the equipment is returned to service, additional mitigating measures must be implemented to reduce risk to ALARP.

**Hydrostatic pressure test (proof test):**

Conducted to establish system integrity during construction or re-establish integrity after facility modifications. Tested up to and exceeding MAWP (1.1 to 1.5 times) using water.

**Test medium**

In all cases an inert medium (e.g. Nitrogen or water) is the preferred test medium. Where an inert medium is not available/practicable, hydrocarbons may be used for testing. Additional mitigating measures **must** be implemented to reduce risk to ALARP (refer to decision process diagram).

- Factors that may influence “availability/practicality” of using an inert medium are:
  - Excessive delays to restart of facilities (typically unplanned circumstances)
  - Excessive cost due to remote location or volume required (with contingency for repeat tests
  - Portable facilities not readily available for large volume
  - Increased or additional hazards introduced by transporting or storing liquid nitrogen on a facility (especially on offshore steel structures)
  - Pressures required cannot be provided by medium

*Continued*

DocuSign Envelope ID: DBC83A32-C98A-4963-9E1E-44593247DA33



## Leak and Pressure Testing, Continued

**Testing with liquids**

The preferred liquid medium is water; for example, treated water. However, the effect of water on the metallurgy of the system or the effect of any residual water or additives on the facility equipment **must** be considered.

At an air temperature below 41°F (5°C), antifreeze **must** be added when water is being used.

The system to be tested with liquid **must** be equipped with valves to vent air pockets.

The selection of liquids other than water should take into account the following considerations:

- The boiling point relative to the test temperature.
- The flammability of the liquid, the flash point of which should be no less than 150°F (65°C) and at least 18°F (-7.7°C) above the maximum test temperature.

Use of hydrocarbon or other flammable or toxic liquids **must** be Risk Assessed and endorsed by the Operations Manager. A procedure **must** be developed to manage this activity.

**Testing with air or nitrogen**

Equipment may be tested with air or nitrogen for the following reasons:

- The equipment support structures cannot support the full weight of a liquid test (liquid may be used with an air or inert gas blanket on top of the partially filled equipment).
- The facility system to be tested normally contains gas, so a gas test is desired.

  Note: When testing with nitrogen, a trace gas may be added which is better able than pressure monitoring to detect small leaks in large systems.

  ! **WARNING:** Air shall not be used if hydrocarbons could be present in the system to be tested.

  ▲ **CAUTION:** High pressure testing with air or nitrogen adds a larger amount of total energy to the system.

  ▲ **CAUTION:** Nitrogen-testing large systems usually requires a large amount of liquefied nitrogen to be brought to the facility. Appropriate precautions for the handling of cryogenic liquids should be taken.

*Continued*

DocuSign Envelope ID: DBC83A32-C98A-4963-9E1E-44593247DA33



## Leak and Pressure Testing, Continued

**Simultaneous leak and pressure testing**

Testing **must** be carried out only on a single, continuous pressure system. Where it is necessary to simultaneously test two independent and non-connected systems adjacent to each other, careful consideration **must** be given to the effects of failure that one pressure system may have on the other.

The following should be part of the pressure testing process:

- Any part that may be adversely affected by the test pressure inside the proposed system.
- The stability of components such as expansion joints and spring hangers.
- The ability to control the rate of pressure rise and the ability to depressurize quickly.
- Any interfaces with lower pressure systems or equipment (including exchangers). Provisions **must** be made to confirm that adjacent systems cannot be overpressured.

*Continued*

DocuSign Envelope ID: DBC83A32-C98A-4963-9E1E-44593247DA33



# Leak and Pressure Testing, Continued

Figure 4-10 Leak and Pressure Testing Decision Process

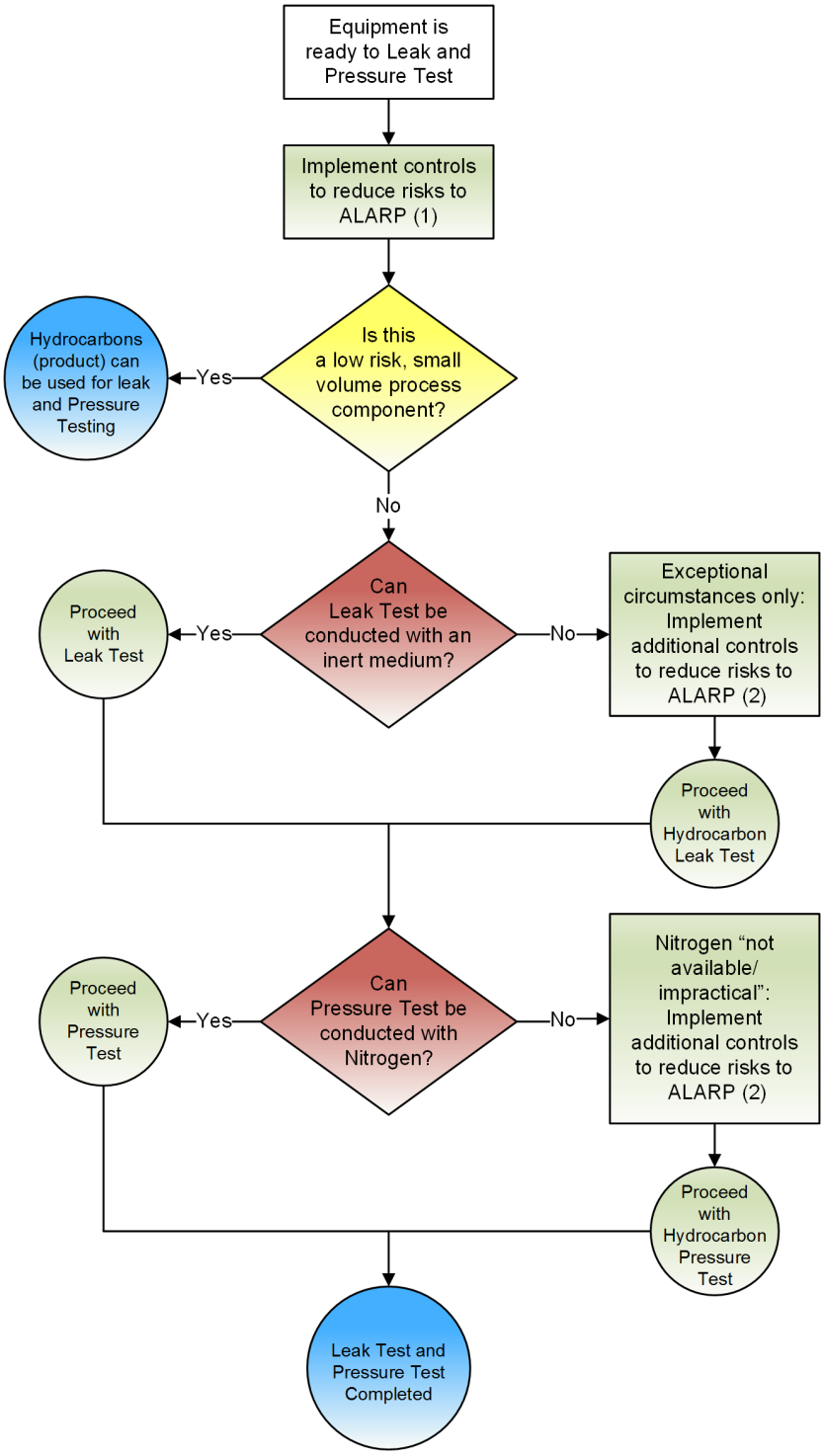


**(1) Reducing Leak and Pressure Testing risks to ALARP:**

- All work that can be impacted by an inadvertent release will be suspended.
- Adequate ventilation exists to prevent asphyxiation from a release.
- Pressure safety valves will be returned to service before the leak testing commences
- Continuous surveillance of the area will be maintained during Leak and Pressure Testing.
- Only personnel essential in conducting the test will be in the immediate area.
- Inert medium will be displaced with hydrocarbons when testing is completed (if applicable).

! **WARNING:** If any leaks are found, the system must be depressurized before attempting to tighten flange bolts or undertake any remedial work.

**(2) Additional risk reduction steps when using hydrocarbons:**

- Air freeing has been conducted.
- Additional hazards of using hydrocarbons are addressed. Determine if a Structured Risk Assessment is required. Use of hydrocarbon/flammable liquids must be approved by the Operations Manager.
- The area is adequately ventilated to prevent asphyxiation or a hazardous atmosphere occurring from a hydrocarbon leak.
- Fire and gas detection in the vicinity will be in service or mitigated.
- Gas testing of flanges and fittings will be conducted
- Sweet gas should be used for testing. Appropriate PPE and gas testing for H2S will be conducted if sour gas must be used.
- Small bore hydrocarbon supply line should be used, fitted with a ball valve for quick isolation and a needle or globe valve for throttling the flow. Supply rates will be kept low.

! **WARNING:** Actuated valves must **NOT** be used (manual mechanical mode can be used).

▲ **CAUTION:** Large valves should not be used because they are difficult to control and seats could be damaged when used to throttle.

- SIMOPS restrictions for "Hydrocarbon Source Activities" will be implemented.
- Flame or spark generating tools or equipment will not be used at or near the work site while Leak or Pressure Testing with hydrocarbons.

*Continued*

DocuSign Envelope ID: DBC83A32-C98A-4963-9E1E-44593247DA33



## Leak and Pressure Testing, Continued

**Process**

The following general process should be used to determine requirements when leak and pressure testing facility systems after recommissioning.

Table 4-12 Testing Process

| Task | Action |
|---|---|
| 1. | The complexity and risks associated with the activities should be used to determine if a job-specific plan should be prepared. Job planning should consider the following:<br>▪ Marked-up P&IDs showing:<br>– System boundaries<br>– Specification change locations<br>– Locations where the testing medium is to be introduced<br>– Locations where the test pressure is to be monitored<br>– Locations where the test pressure is to be bled off<br>▪ Marked-up plot plans showing:<br>– Locations of equipment and pipework where leak/pressure testing will occur<br>– Affected access and escape routes and alternate routes to be established<br>– Location of testing equipment<br>– Location of other unrelated work<br>▪ Any special conditions that should exist before leak/pressure testing is commenced<br>▪ Confirmation that the vessel or equipment support structure is capable of supporting the full weight of the test medium<br>▪ Step-by-step activities to be performed<br>▪ Determine the appropriate Pressure Test duration<br>▪ Any required temporary defeats of critical devices, and when critical devices may be reinstated<br>▪ A Task Hazard Assessment of the activities, and risk mitigation measures<br>▪ Any special spill containment and waste disposal equipment that could be required should leaks occur<br>▪ Any personal protective equipment (PPE) required<br>▪ Emergency procedures/process |

*Continued*

DocuSign Envelope ID: DBC83A32-C98A-4963-9E1E-44593247DA33



## Leak and Pressure Testing, Continued

Table 4-12 Testing Process, continued

| Task | Action |
|---|---|
| 2. | Instruct all personnel in their normal and emergency duties regarding the leak/pressure test. |
| 3. | Prepare the system for leak/pressure testing by doing the following:<br>▪ Confirm that locations where containment was broken are wrapped with joint complete tape.<br>▪ For cold-service equipment, confirm that it is above its minimum design metal temperature (MDMT).<br>▪ Confirm that no cross-referenced work permits are live.<br>▪ Confirm that all bleed, drain, and vent valves have been closed.<br>! **IMPORTANT:** All single valve isolations to the atmosphere **must** be plugged when not in use.<br>– Confirm that all sight glasses are returned to service with the valves reset fully open so that the blowout preventers can work if the sight glass fails.<br>– Confirm that the heat trace systems are recommissioned.<br>– Confirm that the instrumentation is returned to service.<br>– Confirm that shutdown and protective equipment (for example, fire and gas detectors, high and low pressure protection) are recommissioned.<br>– Confirm that any lower-pressure lines or systems are isolated.<br>– Confirm that the required spill containment equipment is in place, especially if hydrocarbons will be introduced to the facility system during the leak/pressure test.<br>– Confirm that the PSVs are recommissioned. If PSVs were replaced, confirm they are the correct size and pressure setting.<br>! **IMPORTANT:** Always open the downstream (flare/vent side) PSV valve first, due to the lower flange rating, then open the upstream (process side) valve to prevent PSV failure if the valve relieves immediately. |

*Continued*

DocuSign Envelope ID: DBC83A32-C98A-4963-9E1E-44593247DA33



## Leak and Pressure Testing, Continued

Table 4-12 Testing Process, continued

| Task | Action |
|---|---|
| 4. | Establish site precautions as follows:<br>▪ Cordon off the area (with caution or danger tape) at a safe distance from the equipment to be tested.<br>▪ Post standby personnel to monitor the leak test from a safe distance as required. Personnel **must** have PPE available.<br>▪ All personnel not associated with the leak testing **must** stay outside of the cordoned-off area. |
| 5. | Whenever the test system extends beyond one physical area, establish a normal and emergency communication system for personnel involved in the test. |
| 6. | Leak testing:<br>▪ Announce the leak testing on the public address (PA) system before and after the test.<br>▪ Pressure up to leak test pressure.<br>▪ When test pressure is reached, the stabilized test pressure **must** be maintained for the determined period of time.<br>▪ Check all system bleed and vent valves, disturbed flanges and fittings and other potential leak points. |
| 7. | Pressure testing:<br>▪ Announce the pressure testing on the public address (PA) system or over the radio before and after the test.<br>▪ Pressurize the system slowly to the test pressure.<br>▪ When the test pressure is reached, the stabilized test pressure **must** be maintained for the determined period of time.<br>▪ Check all disturbed flanges, fittings and other potential leak points. |

*Continued*

DocuSign Envelope ID: DBC83A32-C98A-4963-9E1E-44593247DA33



## Leak and Pressure Testing, Continued

Table 4-12 Testing Process, continued

| Task | Action |
|---|---|
| 7, continued | ▲ **CAUTION:** If any leaks are found, the system **must** be depressurized before attempting to tighten flange bolts or undertake any other remedial work.<br><br>! **IMPORTANT:** The pressurizing equipment or the equipment under test **must** never be left unattended at any time during the test.<br><br>! **IMPORTANT:** The pressurizing equipment **must** be isolated or disconnected from the pressure system when the test pressure is reached.<br><br>▲ **CAUTION:** The possibility of a pressure increase due to thermal expansion should be considered in the case of an extended test.<br><br>! **WARNING:** The equipment under test **must not** be subjected to any form of pressure shock (hammer testing, for example). |

*Continued*

DocuSign Envelope ID: DBC83A32-C98A-4963-9E1E-44593247DA33



# Leak and Pressure Testing, Continued

Table 4-12 Testing Process, continued

| Task | Action |
|---|---|
| 8. | After the leak/pressure testing, remove pressure from the facility system as follows:<br>▪ Slowly depressurize and drain the test medium from the facility system. The pressure **must** be vented or drained gradually under controlled conditions until atmospheric pressure (or the desired operational pressure) is reached. Use the same plan and precautions as for depressurizing and draining hydrocarbons.<br>! **WARNING:** Pressure and volume limitations of the drain or vent system **must** be evaluated and **must not** be exceeded.<br>▪ Vents **must** be open at the high points before draining liquids to confirm that a vacuum is not created.<br>▪ Inert gases **must** be vented to a safe location.<br>Note: The pressurizing medium may be transferred into another facility system for testing in order to conserve the pressuring medium.<br>▪ Checks should be made to confirm that no part of the tested facility system retains any trapped residual pressure; for example, behind non return (check) valves.<br>▪ Prior to returning the equipment to service, the risk of any residual pressuring medium **must** be assessed and actions taken to eliminate them, such as water and its effect on the process product, high or low temperatures, or service that may require the use of special drying methods such as hot dry air. |
| 9. | Upon successful completion of the leak/pressure test, remove the joint complete tape from tested flanges. |
| 10. | Return to service - If pressuring up with a volatile or flashing liquid, special precautions **must** be taken. Vessels and pipework can become brittle and fail due to cooling below their MDMT, if pressured up from ambient conditions with a volatile or flashing liquid. Equipment and facility systems handling such liquids may be pressurized with any suitable gas (for example, nitrogen, inert gas, methane, fuel gas, and so forth) before returning the equipment to service.<br>However, before filling any equipment with a volatile liquid, the gas **must** be first purged out with the *equilibrium vapor* (vapor similar in composition to the volatile liquid used to fill the equipment).<br>The equipment **must** then be pressured up to the normal operating pressure with the equilibrium vapor before liquid is added. This is to prevent the liquid flashing down to low temperatures, which can occur when volatile liquid is added to equipment pressurized with a non-equilibrium vapor. |

DocuSign Envelope ID: DBC83A32-C98A-4963-9E1E-44593247DA33



## 4.6.4 Air Freeing

**Introduction**

This section provides guidelines to protect personnel and equipment when performing air freeing (purging air from a hydrocarbon system) activities. Air freeing should take place as soon as possible after a vessel or system is recommissioned or leak tested.

The air-freeing activity **must** be performed with all isolation valves that could introduce hydrocarbons in the isolated state. These hydrocarbon isolation valves **must not** be moved to the de-isolated state until an inert atmosphere is obtained.

**Goal**

The goal of **air freeing** is to avoid a combustible mixture (hydrocarbons and oxygen) existing inside systems/equipment by removing oxygen prior to the introduction of hydrocarbons. Air freeing is achieved by purging or displacing air with an inert medium such as water or nitrogen before introducing hydrocarbons.

Air may be displaced by the re-introduction of hydrocarbons only when Risk Assessed and approved. Additional mitigations **must** be in place to reduce risk to ALARP.

> ! **IMPORTANT:** Displacing air with hydrocarbons will result in combustible mixtures being present within the system/equipment.

**Air Freeing required:**

- Reinstating facility systems and equipment that contain large volumes and/or complex components that have been opened to the atmosphere e.g. exchangers, compressors, tanks, vessels, turbines and pipelines.
- Reinstatement of facility systems and equipment that have higher risk of ignition such as gas/air mixtures with a wide LEL-UEL range, equipment containing pyrophoric scale or internals that could cause a spark (moving parts or static).
- Reinstatement of systems and equipment where the gas/air mixture in the system could potentially reach known ignition sources such as the flare system or fired heater burners.

**Air Freeing discretionary:**

Small volume process components when the risk presented by an inadvertent hydrocarbon release to atmosphere (with or without ignition) or ignition of the combustible mixture within the equipment can be reduced to ALARP.

*Continued*

DocuSign Envelope ID: DBC83A32-C98A-4963-9E1E-44593247DA33



## Air Freeing, continued

**Goal**, continued

**Considerations when NOT Air Freeing before introducing Hydrocarbons:**

- SIMOPS Restrictions for "Hydrocarbon Source Activities" **must** be implemented.
- All work in proximity to the activity that could be impacted by an inadvertent release **must** be suspended.
- Continuous surveillance of the area **must** be maintained while equipment is being reinstated.
- Fire and gas detection equipment in the vicinity **must** be in service or mitigated.
- Process valves can be cracked open to introduce hydrocarbons to small volume process components. For larger volumes, small bore piping with a ball valve for quick isolation and a needle or globe valve for throttling should be used when introducing hydrocarbons. Keep rates low to minimize velocities and mixing (smaller area/front of combustible mixture).

! **WARNING:** Actuated valves **must NOT** be used (unless manual mechanical mode can be used).

▲ **CAUTION:** Large valves should not be used because they are difficult to control and seats can be damaged when used to throttle flow.

*Continued*

DocuSign Envelope ID: DBC83A32-C98A-4963-9E1E-44593247DA33



## Air Freeing, Continued

Figure 4-11 Equipment Re-instatement Air Freeing Decision Tree

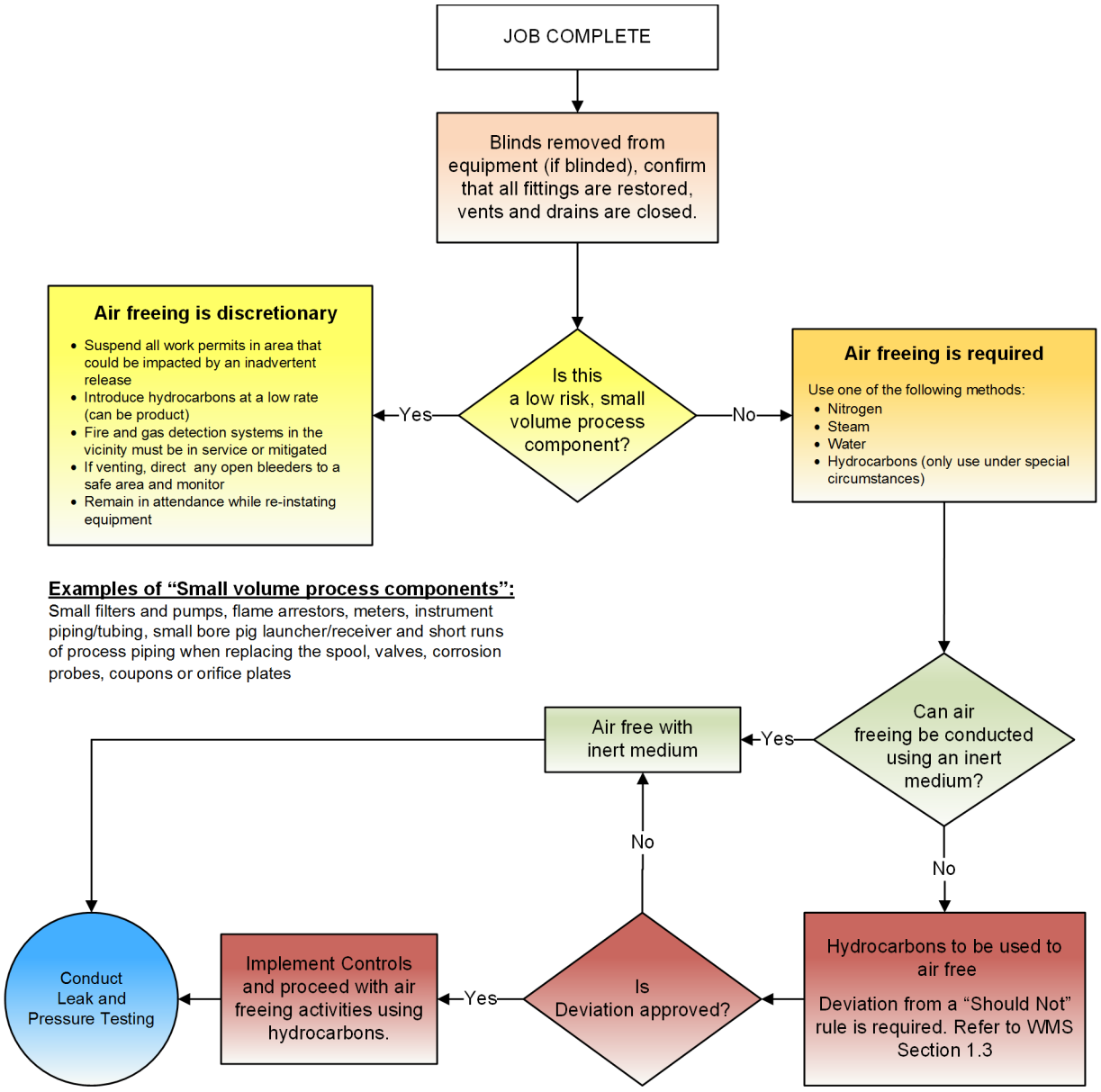


*Continued*

DocuSign Envelope ID: DBC83A32-C98A-4963-9E1E-44593247DA33



## Air Freeing, Continued

**Air-freeing methods**

Three methods can be used for air freeing prior to introducing hydrocarbons:

- Displacing air with water
- Purging air with nitrogen, or other inert gas
- Purging with hydrocarbons

> ! **WARNING:** Purging with hydrocarbons can result in combustible mixtures being present and **must** only be used under special circumstances.

There are two methods of purging air with inert gas:

- Purging by displacement
- Purging by dilution

**Displacing air with water**

For process vessels and systems where moisture does not cause problems, or where an inert gas supply is unavailable, fresh or seawater can be used for displacement of air.

When displacing with water, sufficient high point vents **must** be opened and the fill rate adjusted to suit venting capacity. Overflow hoses should be connected, properly secured, and directed to the drain system to confirm that any residual hydrocarbons do not contaminate the environment.

> ▲ **CAUTION:** If water is to be drained after displacing air, gas is allowed to enter the system by connecting fuel gas to vents. Care **must** be taken to avoid creating a vacuum or overpressuring equipment. PSVs and vacuum breakers should be commissioned prior to this.

Note: If water (fresh or sea) is used, a combined biocide and oxygen scavenger should be used. SDS hazard and handling precautions must be followed.

**Use of Break Tanks**

When using fire or utility water to fill vessels, tanks, and facility systems, a *break* tank is required to confirm that the water system is not directly coupled to the process equipment. The break tank may be directly coupled to the fire or utility water system, with a pump used to pump from the break tank into the process equipment.

> ▲ **CAUTION:** A non-return valve (check valve) at the fill point to a hydrocarbon system **must not** be used as a substitute for the break tank, because there is still a possibility of contamination or overpressuring the water system.

Note: As an alternative to a break tank and pump, a handheld or adequately secured fill hose may be used to fill a vessel from the top, provided that there is no direct coupling to the process equipment. The hose must be electrically bonded to prevent static buildup.

If the use of a break tank and pump is not practicable (for example, where there is a need for water filling and hydrotesting very large vessels), the following are required:

- A Risk Assessment
- Approval from the Operations Superintendent

*Continued*

DocuSign Envelope ID: DBC83A32-C98A-4963-9E1E-44593247DA33



## Air Freeing, Continued

**Purging air with Inert Gas**

Inert gas purging is the preferred method for removing air from process equipment in cold service or where moisture may cause problems, such as hydrate formation. Inert gas may be supplied from an inert gas generator or nitrogen supply. There are two methods of purging with inert gas:

- **Purging by displacement:** Small volume vessels and pipe spools are normally purged using displacement, because inert gas can be introduced quickly enough to displace the air with minimal mixing. Larger vessels can also be air purged using the displacement method, or a combination of displacement and dilution. For displacement, the inert gas is usually introduced at the bottom of the vessel or tank, and the air displaced through open vents at the top. This method is very effective if an inert gas that is heavier than air is used (for example, carbon dioxide).
- **Purging by dilution:** For larger process vessels and facility systems, purging by dilution is more commonly used. The interface is larger and more mixing occurs due to turbulence and convection. The vessel or facility system is pressurized with inert gas, taking care not to exceed the maximum working pressure. Pressure is held for approximately 15 minutes and then the vessel is depressurized from the end opposite to the one where the inert gas was introduced. Any dead legs **must** be thoroughly purged by opening bleeders or cracking flanges to confirm a satisfactory inert gas flow. This process is repeated until oxygen testing indicates less than 4% oxygen in an inert atmosphere. It is then safe to introduce hydrocarbons.

*Continued*

DocuSign Envelope ID: DBC83A32-C98A-4963-9E1E-44593247DA33



## Air Freeing, Continued

**Planning air-freeing activities**

The following guidelines should be used to plan air-freeing activities.

- The complexity and risks associated with the activities should be used to determine if a job-specific plan should be prepared. Job planning should consider the following:
  - Any special conditions that should exist before the plan is commenced.
  - A marked-up P&ID showing system isolation points and purge and vent points.
  - Step-by-step activities to be performed.
  - Facility critical operating parameters (pressures, temperatures, capacities) that should not be exceeded.
  - Any required temporary defeats of critical devices, and when critical devices may be reinstated.
  - The means to monitor the progress of the operations and confirm its successful completion.
  - The means for collecting and disposing of the leak test medium.
  - A Risk Assessment of the activities and risk mitigation measures.
  - Any special spill containment or waste disposal equipment that could be required.
  - Any personal protective equipment (PPE) required.
  - Emergency or abnormal operating procedures.
  - Any restrictions on the use of air or water. For example, liquids may not be acceptable for gas compression systems because they can contaminate the seal oil and cannot always be drained from all low points. Liquid in compressor suction lines can cause serious damage to compressors.
- The Area Operator **must** identify all purge and vent points.

*Continued*

DocuSign Envelope ID: DBC83A32-C98A-4963-9E1E-44593247DA33



## Air Freeing, Continued

**Water flushing**

The following guidelines should be followed when flushing with water:

- Before starting to fill with water, verify that the process equipment and its foundation are constructed to withstand the extra weight of the water.
- Water should be added to the base of the vessel or tank to be flushed. The preferred method for displacing air with water is to use a portable or fixed pump fitted with a break tank. If a hose is used, the following precautions **must** be taken:
  - Hoses **must** be electrically bonded to prevent static electricity buildup.
  - Hoses **must** be secured to the fill valve with a clip.
  - A break tank **must** be used to confirm that no contaminated water backs up into the water system. A check valve alone is not acceptable.

  ▲ **CAUTION:** Never connect utility or fire hoses directly to vessels or pipe work, to prevent the ingress of hydrocarbons into these systems.
- An overflow hose **must** be connected to the high point in the vessel (if applicable) and be run to a closed drain. Make sure the hoses are secured.
- Close the overflow valve and remove the hoses when the vessel is full.
- Bolt up the flange on the fill point (as applicable).

  ! **IMPORTANT:** Some equipment can require vent valves to be opened.

*Continued*

DocuSign Envelope ID: DBC83A32-C98A-4963-9E1E-44593247DA33



## Air Freeing, Continued

**Purging**

The following guidelines should be followed when purging air out of the system with an inert gas such as nitrogen ($N_2$):

- Confirm that the following isolation conditions exist:
  - PSVs and vacuum breakers on process equipment **must** be recommissioned.
  - Blinds and valves isolating sources of hydrocarbons **must** remain in their isolated state.

  ! **IMPORTANT:** Only open valves or remove blinds that are required for the purging activity.

- Connect the inert gas to a low drain point.
- Purging with inert gas may be performed by:
  - Pressuring the system with inert gas, and bleeding it down through a vent system or another safe location until the vented gas is less than 4% oxygen by volume in inert atmosphere purging with inert gas to a vent system, open or closed drain, or to another safe location until the vented gas is less than 4% oxygen by volume in an inert atmosphere.
  - If using a flare system consider type and gas mixture in the flare system

  ! **WARNING:** If purging to a flare or any other system that contains hydrocarbons you **must** consider mitigations to keep the concentration of oxygen in the air gas mixture below 4% oxygen by volume in inert atmosphere.

  ! **WARNING:** Consider the need to restrict access to the area where inert gas is being vented to prevent asphyxiation.

- When flushing a large system, connect to a high vent point in the isolated system as far away as possible from the inlet point.
- Excessive purge rates should be avoided to prevent localized freezing of valves, gauges, or other equipment.

  ! **IMPORTANT:** Monitor the pressure to avoid an unintended pressure buildup.

*Continued*

DocuSign Envelope ID: DBC83A32-C98A-4963-9E1E-44593247DA33



## Air Freeing, Continued

**Purging (displacing water or nitrogen) with hydrocarbons**

Purging with hydrocarbons is sometimes required to replace water or nitrogen (or a combination of both). Examples are:

- Diesel can be required for oil pumps to prevent contamination of seal or lube oil systems.
- Hydrocarbon gas can be required for compressors to prevent contamination of seal or lube oil systems.

Hydrocarbons can be used safely, provided that the appropriate controls and methods are used.

▲ **CAUTION:** When hydrocarbon gas is used to purge the equipment, it **must** be performed in a manner that eliminates any risk of a major hydrocarbon release if there is an opening to the atmosphere.

**Precautions when using hydrocarbons**

The following precautions **must** be observed when purging with hydrocarbons:

- All Hot Work Permits in the area **must** be withdrawn.
- All Critical Work Permits for Spark Potential in the area **must** be withdrawn.
- All work permits in the proximity of the purge location **must** be withdrawn.
- A continuous surveillance of the area during gas purging **must** be maintained.
- Small bore piping **must** be used for the source of hydrocarbons.
- The purge line **must** be fitted with a ball valve for quick isolation and a needle or globe valve for throttling the flow rate. Large valves should not be used because they are difficult to control and seats could be damaged when cracking them open.

  ▲ **CAUTION:** Actuated valves **must not** be used.

- Purge rates should be kept low to minimize velocities. Manual throttling valves should be used to control the purge rate.
- Fire and gas detection equipment **must not** be isolated during purging.
- Any bleed valves that are open to facilitate purging **must** be continuously monitored and **must** be directed to a safe area. The need for spill containment should be evaluated.

DocuSign Envelope ID: DBC83A32-C98A-4963-9E1E-44593247DA33



## 4.6.5 Removing Energy Isolations

**Introduction**

This section provides guidelines to protect personnel and equipment when removing energy isolations.

**Goal**

The goal of removing energy isolations is to enable the introduction of process fluids and the re-energization of facility equipment so that the facility can be started up.

**Removing energy isolations**

When removing energy (mechanical, process, and electrical) isolations, the guidelines under the following margin headings should be followed:

- Planning energy isolation removals
- ICC requirements
- Additional precautions

**Planning energy isolation removals**

The following guidelines should be used to plan the removal of energy isolations.

The complexity and risks associated with the activities should be used to determine whether a job-specific plan should be prepared. Job planning should consider the following:

- Any special conditions that should exist before the plan is commenced.
- A marked-up P&ID clearly identifying where the isolations are. A cross-check should be made to the blind list and the valve isolation list to confirm completeness and correctness of the plan.
- Step-by-step activities to be carried out, including the sequence of isolations removal. De-isolate in the following order:
  - PSVs (to allow maximum vessel protection)
  - Minor facilities
  - Secondary facilities
  - Major facilities

  ▲ **CAUTION:** When process isolations are removed, the order in which this is done is important. PSVs should be the first to be de-isolated, in case of an unforeseen event or delay. The sequence confirms that the equipment is protected as it is returned to service. When returning PSVs to service, always open the downstream valve first, so that the downstream flanges will not be overstressed if the PSV relieves.

- Special precautions to be taken for each isolation removal.
- Facility critical operating parameters (pressures, temperatures, capacities) that should not be exceeded.
- The original work pack should have attached copies of the blinding list, valve isolation list, marked-up P&IDs from the original isolation, and the job-specific plan for de-isolating the facility to be used in the de-isolation process.

*Continued*

DocuSign Envelope ID: DBC83A32-C98A-4963-9E1E-44593247DA33



## Removing Energy Isolations, Continued

**Planning energy isolation removals**, continued

- All work permits for work that has the potential to ignite hydrocarbons or high pressure release **must** be withdrawn.
- Any required temporary defeats of critical devices, and when critical devices may be reinstated.
- A Risk Assessment of the activities and risk mitigation measures.
- Any special spill containment and waste disposal equipment that could be required.
- Any personal protective equipment (PPE) required.
- Emergency or abnormal operating procedures.

**Energy isolation removal practice**

The following general practice regarding energy isolation removal should be followed:

- Upon completion of all recommissioning, leak testing, and air freeing, the Permit Holder brings the Isolation Control Certificate to the Area Operator or CCR and advises that the system is ready to be de-isolated.
- The Isolating Authority and Area Authority **must** confirm that it is safe to perform the requested de-isolations.
- The Area Operator **must** confirm that the isolated system has been recommissioned, leak tested, and air freed, if required.
  - The Area Operator **must** confirm that no other planned or ongoing work requires any of the existing isolation points to remain isolated.
- The Area Operator collects the original and all copies of the Isolation Control Certificate and requests the Area Authority to approve for reinstatement. The Area Authority approves the de-isolation activities to commence.
- For remote locations where the Area Authority is not present, the Area Operator or Permit Holder acts as the Area Authority and approves the de-isolation activities to commence.
- Once the Area Authority or designate has approved the de-isolation:
  - The Permit Holders remove their Functional lock(s) from the isolation control point (ICP).
  - The Area Operator removes his or her Functional lock from the ICP.
  - The Isolating Authority obtains the key(s) from the ICP and removes the locks and tags the isolation points.
- The Area Operator is responsible for coordinating the de-isolating of the equipment.
  - The Isolation Control Certificate (ICC) is closed out.

*Continued*

DocuSign Envelope ID: DBC83A32-C98A-4963-9E1E-44593247DA33



## Removing Energy Isolations, Continued

**Additional precautions**

The following additional precautions should be followed when de-isolating facility systems and reintroducing hydrocarbons:

- The Area Operator **must** always confirm, if possible, that no pressure or liquids have accumulated behind blinds before their removal.
- All flanges and connections on the equipment to be de-isolated **must** be installed and tightened.
- Regardless of any examination showing no pressure or liquids in the flange areas, the Permit Holder and workers **must** always approach deblinding as if there were pressure or liquids in isolated spools, valves, and similar devices.
- When splitting flanges for deblinding, the best practice for breaking containment **must** be followed (bolts farthest away from the workers should be loosened first and the flange parted to check for gas or liquids under pressure).

  **Reference:** Section 4.5.3, "Breaking Containment"

- Non-spark hand tools **must** be used for the breaking flanges when there is a potential for hydrocarbons to be released.

  ▲ **CAUTION:** When a flange is to be unbolted, the Area Operator **must** be present to confirm that the correct flange is being worked.

- Nuts and bolts **must not** be removed until the Area Operator is sure that the equipment is not under pressure.
- All valves and flanges to be deblinded **must** be identified with tags indicating their sequence in the de-isolation process e.g. PSVs returned to service first in case of leaking valves.
- The Area Operator **must** confirm all de-isolation activities and check them off the blinds list(s) and the valve isolation list(s).
- Once all de-isolations are removed and checked off the blinding and valve isolation lists, they **must** be forwarded to the Area Authority.
- Actuated valves should not be de-isolated until the reinstatement of their operating medium, and the removal of any temporary defeats of their control system.

DocuSign Envelope ID: DBC83A32-C98A-4963-9E1E-44593247DA33



## 4.6.6 Acceptance Testing

**Introduction**

This section provides guidelines for acceptance testing after maintenance or repair operations.

> Note: In some cases where hydrocarbons must be introduced for equipment testing to take place, this equipment testing is considered part of the acceptance testing.

**General**

The acceptance test of equipment **must** be performed when equipment has been out of service due to minor maintenance or change of parts.

Acceptance tests of equipment after major maintenance or modification to the equipment require specific performance or test practices.

**Practices**

The Area Operator should perform the acceptance test in cooperation with the Area Authority.

The following requirements apply to the acceptance test:

- Check the equipment for leaks.
- Function test the equipment, including:
  - Start and stop of pumps
  - Correct settings for level or pressure on instruments
  - Alarm checks of instruments
  - Open or closure test of valves
  - Closing time for emergency shutdown (ESD) valves
  - Correct signals and alarms, both local and in the CCR
  - Equipment capacity verification test, when necessary

When the acceptance test has been approved by the Area Operator and the Area Authority, the equipment can be put back into service.

**Post work surveillance**

Close observation of the equipment and facility system **must** be maintained after it is returned to service regardless of the leak test results. Thermal expansion or contraction and increased pressures can result in a leak developing and quick intervention being required. Continuous surveillance should be maintained until the equipment has reached operating pressures and temperatures.

DocuSign Envelope ID: DBC83A32-C98A-4963-9E1E-44593247DA33

DocuSign Envelope ID: DBC83A32-C98A-4963-9E1E-44593247DA33



# 4.7 Tools

**Certificates**

These forms are referenced in this section and listed on following pages:

4.7.1 Temporary Defeat Certificate

4.7.2 Isolation Control Certificate

4.7.3 Functional Lock Removal Form

The following tests are referenced in Section 4.4.2, "Isolation Integrity" under "Process isolation integrity tests."

4.7.4 Double Block and Bleed (DBB) Integrity Test

4.7.5 Double Block Valve (DBV) Integrity Test

4.7.6 Single Block Valve (SBV) Integrity Test

DocuSign Envelope ID: DBC83A32-C98A-4963-9E1E-44593247DA33

# Temporary Defeat Certificate

No. _____

☐ Electrical ☐ Mechanical ☐ Instrumentation/Process ☐ Other Safety _____

## Temporary Defeat Information

**Description of specific device/system and tag number being defeated:**

☐ Approved Device Bypass Procedure Attached ☐ Risk Assessment Required ?

**Procedure Title:** _____ **Work Permit Number (if applicable):** _____

**Reason for defeating the device/system:**

**Does the defeat create a Critical Operating Parameter (COP)?** ☐ Yes ☐ No

**COP approved?** ☐ Yes ☐ No

## Define risk mitigation controls in place during the bypass that provide adequate protection:

**(Use THA on reverse side)**

| Hazards: | Controls: |
|---|---|
| | |
| | |
| | |
| | |
| | |
| | |

## Authorization for Temporary Defeat - up to 12 hours

| | | | | |
|---|---|---|---|---|
| **Duration of Defeat:** | From (date): | Time: | To (date): | Time: |
| **Permit Holder/Requestor (Print):** | | **Area Authority (Print):** | | **Sign:** |

## Execution of Temporary Defeat

| | | | | |
|---|---|---|---|---|
| **Defeated by:** | Name (Print): | Sign: | Date: | Time: |

## Return to Service

| | | | | |
|---|---|---|---|---|
| **Returned to Service by:** | Name (Print): | Sign: | Date: | Time: |

## Long Term Defeats

| | | | |
|---|---|---|---|
| **Requested by:** | Name (Print): | Sign: | Date: |

**Reason for Long Term Defeat:**

## Long Term Defeat Authorization

| | | | | |
|---|---|---|---|---|
| **>12 hours to 7 days** | Site PIC (Print): | Sign: | Date: | Expiry Date: |
| **7 days to 30 days** | Operations Superintendent (Print): | Sign: | Date: | Expiry Date: |
| **>30 days and every subsequent 30 days** | Operations Manager (Print): | Sign: | Date: | Expiry Date: |

If a permanent change is to be introduced, then list the MOC number.

**MOC Number:**

## Shift Change

Open Temporary Defeat Certificates must be reviewed during each shift change and recorded in the shift handover log/document.

A copy of any open Defeat must be posted at the Control Room or Central Control Point. A copy must also be attached to any permit pack (where applicable).

DocuSign Envelope ID: DBC83A32-C98A-4963-9E1E-44593247DA33

# Temporary Defeat Task Hazard Assessment

## Mechanical Hazards and Controls – Protection to be defeated or not functioning

| Vibration Monitoring | Seal Failure System Isolated or Inoperable | Engine Overspeed Trip Isolated or Inoperable | Limit Switches Isolated or Inoperable (e.g. Crane or Rig Crown Saver) | Blowout Preventer Isolated or Inoperable |
|---|---|---|---|---|
| ☐ Shut down equipment<br>☐ Provide portable monitoring equipment<br>☐ Conduct frequent surveillance<br>☐ Other: | ☐ Shut down pump or compressor<br>☐ Continuous seal pressure surveillance and manual intervention<br>☐ Other: | ☐ Shut down engine<br>☐ Continuous speed surveillance and manual intervention<br>☐ Other: | ☐ Drilling operations to cease<br>☐ Lift Plan in place<br>☐ Do not operate crane near limits<br>☐ Stop loading ship and disconnect<br>☐ Other: | ☐ Stop Drilling or Wellwork<br>☐ Other: |

## Instrument / Process Hazards and Controls – Protection to be defeated or not functioning

| Instruments Isolated or Inoperable e.g. HHSD or LLSD | Critical valves defeated by open bypass valves | Analyzer on product isolated or inoperable | Emergency Shutdowns (ESD's) Isolated or Inoperable | Pressure Safety Valve (PSV) Isolated or removed | Protection Isolated or Inoperable e.g. Under Voltage, Under Current, High Voltage |
|---|---|---|---|---|---|
| ☐ Shut down process on alarm<br>☐ Monitoring of sight glass<br>☐ Monitoring of level trends<br>☐ Maintain steady operating state<br>☐ Other: | ☐ Shut down process on alarm<br>☐ Shut down equipment<br>☐ Monitoring of sight glass<br>☐ Monitoring of level trends<br>☐ Maintain steady operating state<br>☐ Other: | ☐ No product to sales<br>☐ Periodic laboratory analysis<br>☐ Product redirected to holding tanks / vessels<br>☐ Other: | ☐ Person in attendance for manual intervention<br>☐ Reduce throughput<br>☐ Other: | ☐ Reduce throughput to remaining relief capacity<br>☐ Continuous monitoring and manual intervention<br>☐ Redundancy in relief capacity available<br>☐ Other: | ☐ Shut down generator(s)<br>☐ Isolate affected electrical distribution network<br>☐ Alternative protection available<br>☐ Provide power from alternate supply<br>☐ Other: |

| DCS System Isolated or Impaired | Shutdown System Isolated or Impaired e.g. CCC or Triconix | Chemical injection system isolated or inoperable | Well Kick Detection Isolated or Inoperable |
|---|---|---|---|
| ☐ Shut down process<br>☐ Other: | ☐ Shut down process<br>☐ Shut down affected equipment<br>☐ Other: | ☐ Continue to process - no impact due to short duration<br>☐ Batch inhibition until repaired<br>☐ Other: | ☐ Stop Drilling or Wellwork<br>☐ Other: |

## Safety Hazards and Controls – Protection to be defeated or not functioning

| Fire Protection System Inoperable or Impaired | Fire Pump Inoperable or impaired | Make-up to Fire Water System Inoperable or impaired | Emergency / Fire Alarm Inoperable or Impaired | Fire Detection Inoperable or Impaired | Gas detection Inoperable or Impaired |
|---|---|---|---|---|---|
| ☐ Shut down facility<br>☐ Stop all high consequence work e.g. hot work, CSE, Drilling, Wellwork and Diving<br>☐ Communicate to all affected personnel<br>☐ Other: | ☐ Shut down facility<br>☐ Stop all high consequence work e.g. hot work, CSE, Drilling, Wellwork and Diving<br>☐ Back-up fire pump available<br>☐ Communicate to all affected personnel<br>☐ Other: | ☐ Shut down process if water levels approach minimum allowable<br>☐ Stop all high consequence work e.g. hot work, CSE, Drilling, Wellwork and Diving<br>☐ Alternative sources to be provided<br>☐ Other: | ☐ Stop all high consequence work e.g. hot work, CSE, Drilling, Wellwork and Diving<br>☐ Alternate notification method implemented e.g. use of radios<br>☐ Portable air horns provided<br>☐ Other: | ☐ Stop all high consequence work e.g. hot work, CSE, Drilling, Wellwork and Diving<br>☐ Continuous surveillance and manual intervention<br>☐ Communicate to all affected personnel<br>☐ Other: | ☐ Stop all high consequence work e.g. hot work, CSE, Drilling, Wellwork and Diving<br>☐ Communicate to all affected personnel Adequate coverage by remaining gas detectors<br>☐ Deploy portable gas detection devices<br>☐ Regular Surveillance<br>☐ Continuous Surveillance<br>☐ Other |

| ESD System Inoperable or Impaired | Public address System Inoperable or Impaired | Smoke Detection Inoperable or Impaired | Radar Inoperable or Impaired | Transport systems (e.g. Helipad lights, Nav.lights, Beacons, Runway lights) Inoperable or Impaired | Escape Craft or Lifeboat not functional |
|---|---|---|---|---|---|
| ☐ Shut down process<br>☐ Stop all high consequence work e.g. hot work, CSE, Drilling, Wellwork and Diving<br>☐ Additional surveillance<br>☐ Other: | ☐ Alternative communication & notification system identified for emergencies<br>☐ Communicated to affected personnel<br>☐ Other: | ☐ Stop all high consequence work e.g. hot work, CSE, Drilling, Wellwork and Diving<br>☐ Additional surveillance<br>☐ Communicate to all affected personnel<br>☐ Other: | ☐ Provide coverage from other facilities<br>☐ Provide portable radar unit<br>☐ Provide coverage from vessel / ship<br>☐ Other: | ☐ Notify affected parties and Government Authorities<br>☐ No night flights<br>☐ Provide alternate lighting<br>☐ Surveillance<br>☐ Other: | ☐ Shut down and make facility safe<br>☐ Stop all high consequence work e.g. hot work, CSE, Drilling, Wellwork and Diving<br>☐ Helicopter to be on location<br>☐ POB's reduced to available capacity<br>☐ Vessel on standby<br>☐ Other: |

| Emergency Lighting Inoperable or Impaired | Emergency Eye Wash or Shower Inoperable | Communication System Shut Down or Faulty | HVAC / Pressurization Inoperable or Impaired | Tank Bunding / Containment to be compromised or Breached |
|---|---|---|---|---|
| ☐ Provide Alternative Lighting<br>☐ Communicate to affected personnel<br>☐ Restrict high consequence work e.g. hot work, CSE, Drilling, Wellwork and Diving<br>☐ Other: | ☐ Communicate to all affected personnel<br>☐ No chemical handling in vicinity<br>☐ Provide portable eye wash / shower<br>☐ Provide portable shower<br>☐ Other: | ☐ Redundancy in available frequencies or equipment<br>☐ Portable devices provided<br>☐ Communicate to affected personnel<br>☐ Other: | ☐ Shut down facility on gas or fire detect near quarters or buildings<br>☐ Communicate to all affected personnel<br>☐ Restrict high consequence work | ☐ Tank(s) level(s) to be reduced to remaining bund capacity<br>☐ Tank(s) to be emptied<br>☐ Other |

DocuSign Envelope ID: DBC83A32-C98A-4963-9E1E-44593247DA33

# Work Management System - Isolation Control Certificate ☐ ICC ☐ RFIC

☐ Electrical ☐ Mechanical ☐ Instrumentation | **Isolation Certificate No.**

**Title:**

**Facility:** | **Created by:**

## Isolation Details

| Date: | Time: | Facility: | Permit No(s): |
|---|---|---|---|

**Number and/or description of equipment/system to be isolated:**

**Reason for Isolation:**

**Zero Energy Demonstration Method:**

**STT Required:** ☐ Yes ☐ No

**STT Plan/Points:**

☐ Pre-established Isolation List Attached ☐ Pre-established Blind List Attached

## Isolation Control Points

### Isolation Detail Key

**Isolating Type:** E - Electrical; M - Mechanical; I - Instrument

**Isolating Method:** L - Locked; T - Tagged; P - Plugged; C - Capped; D - Disconnect; B - Blind; S - Spade; G - Grounded; RK - Racked; RMV – Removed; INST – Installed

### Point Position Key

**Isolating States:** NO – Normally Open; NC – Normally Closed; CSO – Car Sealed Open; CSC – Car Sealed Closed; PLUG – Plug in place; DCT – Disconnected; CON – Connected; REC - Reconnect; APP – Applied; RMV – Removed; REP – Replaced; LO – Locked Open; LC – Locked Closed; IN – In; OUT – Out

| Isolation Detail | | | | | | Point Position | | | Installed | STT | | Removed |
|---|---|---|---|---|---|---|---|---|---|---|---|---|
| Pt. # | Equipment ID: | Description: | Isolation Type: | Isolation Method: | Comment: | Normal | Isolated | De-Isolated | IA Initial as in place | De-Isolated | Re-Isolated | Initial as removed |
| 1 | | | | | | | | | | | | |
| 2 | | | | | | | | | | | | |
| 3 | | | | | | | | | | | | |
| 4 | | | | | | | | | | | | |
| 5 | | | | | | | | | | | | |
| 6 | | | | | | | | | | | | |
| 7 | | | | | | | | | | | | |
| 8 | | | | | | | | | | | | |
| 9 | | | | | | | | | | | | |
| 10 | | | | | | | | | | | | |
| 11 | | | | | | | | | | | | |
| 12 | | | | | | | | | | | | |
| 13 | | | | | | | | | | | | |
| 14 | | | | | | | | | | | | |
| 15 | | | | | | | | | | | | |
| 16 | | | | | | | | | | | | |
| 17 | | | | | | | | | | | | |
| 18 | | | | | | | | | | | | |
| 19 | | | | | | | | | | | | |
| 20 | | | | | | | | | | | | |
| 21 | | | | | | | | | | | | |

| Isolation Detail | | | | | | Point Position | | | Installed | STT | | Removed |
|---|---|---|---|---|---|---|---|---|---|---|---|---|
| Pt. # | Equipment ID: | Description: | Isolation Type: | Isolation Method: | Comment: | Normal | Isolated | De-Isolated | IA Initial as in place | De-Isolated | Re-Isolated | Initial as removed |
| 22 | | | | | | | | | | | | |
| 23 | | | | | | | | | | | | |
| 24 | | | | | | | | | | | | |
| 25 | | | | | | | | | | | | |
| 26 | | | | | | | | | | | | |
| 27 | | | | | | | | | | | | |
| 28 | | | | | | | | | | | | |
| 29 | | | | | | | | | | | | |
| 30 | | | | | | | | | | | | |
| 31 | | | | | | | | | | | | |
| 32 | | | | | | | | | | | | |

## Blind Register

| | | Isolating Method | | | Installed | | | Removed | | |
|---|---|---|---|---|---|---|---|---|---|---|
| Blind No. | Description/Location | Rating | Size | Type (S or B) | Date | IA Initial | Verifier Initial | Date | IA Initial | Verifier Initial |
| 1 | | | | | | | | | | |
| 2 | | | | | | | | | | |
| 3 | | | | | | | | | | |
| 4 | | | | | | | | | | |
| 5 | | | | | | | | | | |
| 6 | | | | | | | | | | |
| 7 | | | | | | | | | | |
| 8 | | | | | | | | | | |
| 9 | | | | | | | | | | |
| 10 | | | | | | | | | | |
| 11 | | | | | | | | | | |
| 12 | | | | | | | | | | |
| 13 | | | | | | | | | | |
| 14 | | | | | | | | | | |
| 15 | | | | | | | | | | |
| 16 | | | | | | | | | | |
| 17 | | | | | | | | | | |
| 18 | | | | | | | | | | |
| 19 | | | | | | | | | | |
| 20 | | | | | | | | | | |

## Plan Verification

The isolation plan is correct for the proposed work.

**Verified by Area Authority (Operations):** **Signature:** **Date:** **Time:**

## Isolation Verification

**Note: A second independent competent person must verify each isolation point and sign below.**

The isolations have been identified and performed so that the equipment is properly isolated.

**Verified by:** **Signature:** **Date:** **Time:**

## De-isolation Verification

All isolations have been removed and equipment/system can be reinstated.

**Verified by Area Operator/Isolating Authority:** **Signature:** **Date:** **Time:**

DocuSign Envelope ID: DBC83A32-C98A-4963-9E1E-44593247DA33



**The Area Authority/Area Authority Functional (AA/AAF) is the only person authorized to remove Permit Holder's lock** if the individual leaves the site without removing the lock or turning over the key(s) to the Functional Supervisor**.**

The following is the process to apply when a lock is to be removed:

- The status of the job must be confirmed before the lock is removed
- Verification that the individual who applied the functional lock is no longer at the site
- All reasonable effort to contact the individual and inform him or her that the lock needs to be removed has been made
- The individual is informed of the removal of the lock before resuming work at the site

## Notice of Functional Lock Removal

| | | |
|---|---|---|
| Functional Lock Assignee | | |
| Contract Company Name (if applicable) | | |
| Date Lock was applied | | Lock # |
| ICC# | PTW# | |

| | |
|---|---|
| Endorsement prior to Functional Lock removal | |
| **PIC Signature:** | **Date:** |

| | |
|---|---|
| *A check of the equipment was made prior to the removal of the lock and verification that the removal of the lock would not create a safety hazard.* | |
| **AA/AAF Signature:** | **Date:** |

| | |
|---|---|
| *I have been notified that my Functional Lock was removed. My Functional Supervisor verified that I was not on-site and unsuccessful attempts were made to contact me. The status of the job was confirmed prior to the removal of the lock.* | |
| **Functional Lock Assignee:** | **Date:** |

DocuSign Envelope ID: DBC83A32-C98A-4963-9E1E-44593247DA33



# Double Block and Bleed (DBB) Isolation Integrity Test

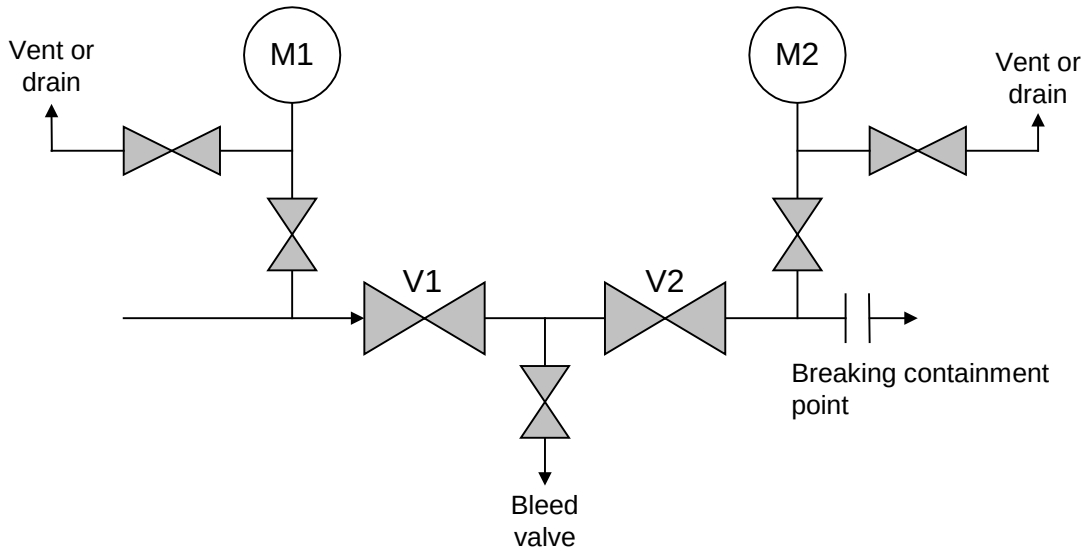


## LEGEND

V1: First upstream isolation from live system

M1: Live side monitoring point (pressure gauge, vent, or drain)

V2: Second downstream isolation valve from live system

M2 Monitoring point between valves and the breaking containment point

## TEST

1. Aggressively ensure that tapping at M1, M2, and the bleed valve are not obstructed and that pressure gauges are reading properly.
2. Close the downstream valve V2.
3. Note pressure at monitoring points M1 and M2.
4. Vent or drain the section of line to be broken and monitor the pressure at M2 until the pressure is zero.
5. Close the vent or drain at the break point and monitor M2. No pressure buildup at M2 verifies the integrity of V2.
6. Close the upstream valve V1.
7. Note the pressure M1.
8. Open the bleed valve and bleed between V1 and V2. Monitor the bleed valve until the pressure is zero.
9. Leave the bleed valve in the open position to allow for further monitoring.

▲ **CAUTION:** Do not leave process vents to the atmosphere open unless they are directed to a safe location and secured. All vents and bleeds should be closed when not actively working on or in attendance.

DocuSign Envelope ID: DBC83A32-C98A-4963-9E1E-44593247DA33



# Double Block Valve (DBV) Isolation Integrity Test

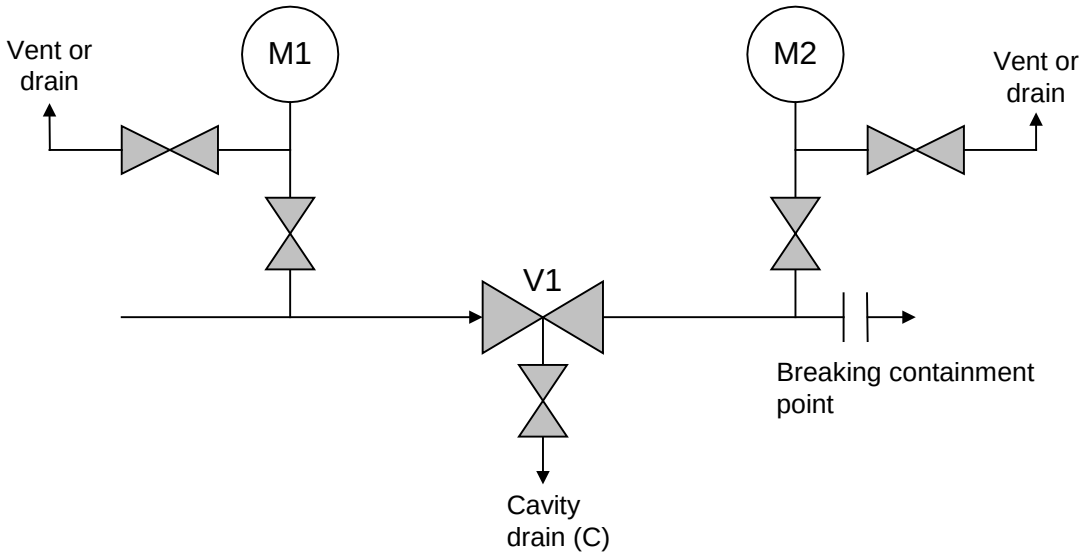


## LEGEND

V1: Double block valve (DBV) isolation from live system

M1: Live side monitoring point (pressure gauge, vent, or drain)

M2: Monitoring point between valves and the breaking containment point

C: Cavity drain

## TEST

1. Aggressively ensure that M1, M2, and C are not blocked and are reading properly.
2. Close V1 isolation valve.
3. Note pressure at M1, C, and M2.
4. Vent or drain the downstream section of line to be broken. Monitor the pressure at M2 vent until pressure reaches zero.
5. Close the vent or drain at breakpoint and monitor M2.
6. Open C and bleed the cavity between seals until pressure is zero. Zero pressure buildup at C verifies the integrity of the upstream seal.
7. Leave C in the open position to allow for further monitoring.

▲ **CAUTION:** Do not leave process vents to the atmosphere open unless they are directed to a safe location and secured. All vents and bleeds should be closed when not actively working on or in attendance.

DocuSign Envelope ID: DBC83A32-C98A-4963-9E1E-44593247DA33



# Single Block Valve (SBV) Isolation Integrity Test

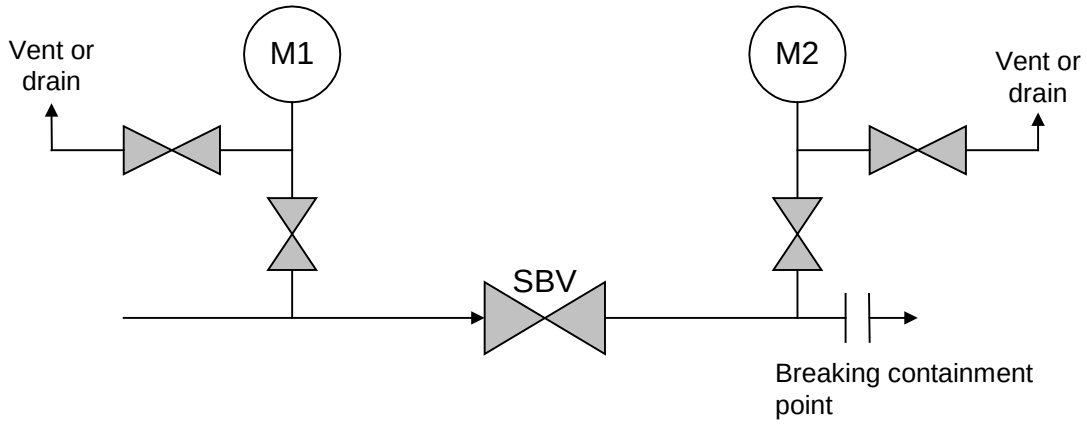


## LEGEND

SBV: Single block valve isolation from live system

M1: Live side monitoring point (pressure gauge, vent, or drain)

M2: Monitoring point between valves and the breaking containment point

## TEST

1. Ensure that M1 and M2 are free of obstructions and are indicating correctly.
2. Close the isolation valve.
3. Note pressure at M1 and M2.
4. Vent or drain downstream section of the line that is to be disconnected until M2 has zero pressure.
5. Close downstream vent/drain valve and monitor M2. No pressure buildup proves the integrity of the SBV.
6. Leave downstream vent or drain at the break point in the open position to allow for further monitoring.

▲ **CAUTION:** Do not leave process vents to the atmosphere open unless they are directed to a safe location and secured. All vents and bleeds should be closed when not actively working on or in attendance.

DocuSign Envelope ID: DBC83A32-C98A-4963-9E1E-44593247DA33



# 5.0 Gas Testing

## Overview

**Introduction**

Gas testing is performed to confirm a safe working environment by recognizing and eliminating flammable or toxic gas hazards before work commences, and by monitoring and maintaining these conditions throughout the activity, or terminating the activity if adverse conditions develop.

Gas and atmospheric testing **must** be documented on the Work Permit worksite copy in the Atmospheric Test Record Section. It is optional that the results are entered in ePTWS.

**References:**

- Section 3.2, "Work Permitting Process", "Work Site Verification"
- Section 3.4, "Confined Space Entry Precautions," "Atmospheric testing"
- Section 3.7, "Tools," for a supplementary Atmospheric Test Record for situations where work is conducted without a permit or additional space is required for recording values

**In this section**

This section contains the following information:

**5.1 Gas Types, Detectors, Testing, and Properties ..... 5-2**

**5.2 General Gas Testing Practices ..... 5-6**

**5.3 Using Electronic Gas Testers ..... 5-10**

**5.4 Using Tube Detectors ..... 5-12**

DocuSign Envelope ID: DBC83A32-C98A-4963-9E1E-44593247DA33



# 5.1 Gas Types, Detectors, Testing, and Properties

**Types of gases**

Portable gas detectors **must** be available to check for the following types of gases (where required):

- Oxygen ($O_2$) content (%) in air
- Hydrocarbon or flammable vapor (% of lower explosive limit [LEL] in air)
- Total hydrocarbons (ppm) in air
- Hydrogen sulfide ($H_2S$) content (ppm) in air
- $O_2$ content (%) in inert atmosphere
- Hydrocarbon (volume %) in inert atmosphere
- $H_2S$ content (ppm) in inert atmosphere
- Other Toxic gases, such as:
  - Sulfur dioxide ($SO_2$)
  - Carbon monoxide (CO)
  - Benzene
  - Carbon dioxide ($CO_2$)

  Note: The Production Unit in consultation with their MOH Department should determine any additional Gas Test requirements related to their operations.

**Types of gas detectors**

In addition to permanently installed gas monitoring systems which are tied into the facility alarm systems, portable gas detectors are used to evaluate specific work site conditions.

There are two types of acceptable portable detectors that can be used for atmospheric gas testing:

- Electronic detection devices which operate via diffusion (passive) or by use of a pump (i.e., aspirated) to draw the gas across the sensor
- Detector (e.g. Dräger) tubes

*Continued*

DocuSign Envelope ID: DBC83A32-C98A-4963-9E1E-44593247DA33



## Gas Types, Detectors, Testing, and Properties, Continued

**Gas Detector Application**

Diffusion (Passive) devices can be used for conducting gas testing in general worksite locations, continuous area monitoring, etc.

Aspirated (Pump Type) should be used for conducting gas testing using pump extraction capability (e.g. confined space entry, flange leak testing, inaccessible areas, etc.)

Note: It is important to utilize the appropriate instrument (passive or aspirated) for the specific location and atmosphere to be tested. It is also important to know and use the correct Gas Detector when sampling in Inert Atmospheres.

Detector (e.g. Dräger) tubes are used for a variety of functions concerned with the measurement of gases. The chief function is to provide a rapid guide to air purity and, in certain cases such as leak detection, for production purposes.

**Gas Testing and Monitoring**

Gas testing is the act of sampling a defined area for specific atmospheric contaminants prior to work activities (where required) and intermittently using a portable detector.

Monitoring is the act of continuously using a portable gas detector to ensure air quality is safe at the work location for personal protection.

! **IMPORTANT:** Sampling devices designed to measure average concentrations of specific contaminants over a measured time interval are used for Industrial Hygiene exposure monitoring and **must** not be used as gas detection devices (e.g. passive exposure badges).

Note: "Monitoring" for real time determination of air quality should not be confused IH Exposure Monitoring.

*Continued*

DocuSign Envelope ID: DBC83A32-C98A-4963-9E1E-44593247DA33



## Gas Types, Detectors, Testing, and Properties, Continued

**Types of gas tests**

Gas testing requirements **must** be recorded as a control measure on the Atmospheric Test Record of the work permit. There are four different requirements for gas testing as detailed in the following. With the exception of continuous gas monitoring all **must** be performed by an Authorized Gas Tester (AGT).

- **Initial gas test:** An initial test for combustible or toxic gases **must** be performed and recorded to confirm the safety of the work site before certain work can commence, such as confined space entry, hot work, and spark potential.
- **Initial oxygen test:** An initial test for oxygen **must** be performed before certain work can commence, such as confined space entry.
- **Periodic gas test:** Repeat gas tests **must** be carried out at specified intervals and recorded, typically after meal breaks and any other extended breaks (>30 minutes) from the work site where conditions may have changed.
- **Continuous gas testing:** The work site is continuously tested using a portable gas detector. This may be in addition to the requirements for initial or repeat gas tests by an AGT. Continuous gas testing **must** be conducted for jobs such as:
  - Confined space entry
  - Hot work
  - Spark potential (for example, open electrical junction boxes)
  - Breaking containment

! **IMPORTANT:** The results of initial and periodic testing **must** be recorded on the Atmospheric Test Record. The results **must** be available at the work site.

*Continued*

DocuSign Envelope ID: DBC83A32-C98A-4963-9E1E-44593247DA33



## Gas Types, Detectors, Testing, and Properties, Continued

**Hazards**

The reasons for and the potential hazards of improper gas testing include:

- Use of incorrect or faulty electronic gas detector.
- Use of incorrect detector for testing in inert atmospheres
- Use of incorrect detector tube, or faulty aspirator.
- Checking in the wrong location.

  **Example:** Checking up high for a gas that is heavier than air.
- Presence of heavy liquids or sludge that yield no vapors until disturbed or heated.
- Checking for the wrong gases.
- Gases being released after checking due to the activity being performed. Activities that can cause gases to be released include:
  - Hot work
  - Steaming
  - Use of chemicals
  - Abrasive blasting
- The tester is not competent.

The potential consequences of improper gas testing include:

- Inaccurate gas readings.
- Accumulation of dangerous gases (hydrocarbon-rich or oxygen-deficient).
- Exposure of personnel to dangerous substances.
- Hot work in a flammable gas environment.
- Fire or explosion.
- Personnel injury or death.
- Damage to facilities or equipment.

Potential risk mitigation steps for gas testing include:

- Properly trained personnel.
- Proper equipment calibration.
- Gas detector use and maintenance logging.

*Continued*

DocuSign Envelope ID: DBC83A32-C98A-4963-9E1E-44593247DA33



## 5.2 General Gas Testing Practices

**Introduction**

This section describes general precautions and practices pertaining to gas testing.

**Activities requiring gas testing**

Gas testing **must** be part of the work planning and execution for the following broad categories of work:

- Confined space entry
- Hot work
- Spark potential work
- Application of coatings inside confined spaces
- Breaking containment, especially when toxic gases or hydrocarbons may be present
- Any work where hydrocarbon or toxic gases may be present
- Operation of a vehicle or internal combustion engine in the process area
- Work on live electrical equipment in the process area
- Use of non-hazardous area approved equipment in the process area

Once the work activity has been identified and that Gas Testing is required, an Authorized Gas Tester (AGT) **must** be assigned to both develop the Gas Testing Plan and perform the required Gas Tests to allow work to safely proceed.

The AGT is responsible for completing all necessary Tests and documenting the results on the worksite copy of the Atmospheric Test Record. The AGT **must** ensure results are shared with the Supervisor and Work Team and that all necessary controls are in place.

**Gas testing for hot work**

When hot work is to commence, gas tests **must** be performed at the work site before and during the work according to the requirements of the work permit.

Some examples of where to perform gas tests are:

- Flanges, valve packing, seals, vents, and drains near the hot work site
- Inside and outside a hot work habitat
- Continuous testing to ensure no hydrocarbons are migrating into the area

**Reference:** Section 3.3, "Hot Work"

*Continued*

DocuSign Envelope ID: DBC83A32-C98A-4963-9E1E-44593247DA33



## General Gas Testing Practices, Continued

**Gas testing in confined spaces**

Initial gas testing of confined spaces **must** be performed from a safe position outside of the confined space. If a representative gas test cannot be made from the outside, the following requirements apply:

- The person performing the gas test **must** be equipped with the appropriate personal protective equipment (PPE), including:
  - Breathing apparatus (BA)
  - Eye protection
  - Clothing sufficient to protect the skin from exposure to potential toxic substances
- A Confined Space Entry Attendant **must** be present and monitor confined space for changing conditions.

**Reference:** Section 3.4 "Confined Space Entry Precautions," under headers "Atmospheric testing" and "Communications" which contain further requirements related to gas testing and critical entry into a confined space.

**Performing gas tests**

The following factors should be considered when performing gas tests. These include:

- Correct detector and scale for the purpose
- Wind strength and direction
- Ambient temperature
- Equipment or building configuration
- Location of engine exhausts or other potential contaminants
- Potential soil contamination
- Natural or forced ventilation
- Low points, drains, or culverts
- Density of the gases to be tested (heavier or lighter than air)
- Types of gases that may be present

*Continued*

DocuSign Envelope ID: DBC83A32-C98A-4963-9E1E-44593247DA33



## General Gas Testing Practices, Continued

**Where to perform gas tests**

The following guidelines should be considered when performing gas tests:

- **Hydrocarbons (HC):** Test vents, open drains, flanges, bleeder valves, valve packing glands, screwed fittings, or other potential sources of hydrocarbon leaks (liquids or vapors)

  Note: Most hydrocarbon vapors are heavier than air and can accumulate in low points, such as drains, culverts, basements, and so forth. However some light ends can accumulate in high spots.

- **Oxygen ($O_2$):** Test for oxygen deficiency in vessels, tanks, pits, basements, and so forth prior to confined space entry.

  ▲ **CAUTION:** Oxygen deficiency can be caused by ongoing activities in a confined space (such as breathing, hot work, chemical reactions). Continuous monitoring of oxygen is necessary to evaluate the effectiveness of ventilation and the safety of continued presence of personnel in the confined space. If testing indicates, personnel **must** use appropriate breathing apparatus (BA).

- **Hydrogen sulfide ($H_2S$):** Hydrogen sulfide is slightly heavier than air, toxic, smells like rotten eggs, but cannot be recognized at higher concentrations due to loss of smell, and is flammable. The product of burning hydrogen sulfide, sulfur dioxide ($SO_2$), is also toxic. Hydrogen sulfide can be present in hydrocarbon production, or it can be formed over time from decaying drilling mud components or water. Where fixed hydrogen sulfide monitors and alarms do not exist or do not effectively protect the work area, portable continuous-monitoring devices **must** be used.
- **Carbon monoxide (CO):** Carbon monoxide is produced by internal combustion engines and by inert gas generators. It is toxic, colorless, and odorless. Leaking exhaust systems in enclosed areas (such as generator buildings) can cause carbon monoxide to accumulate. Engine exhausts placed too close to, or upwind of, confined spaces (or confined space ventilation intakes) may lead to a dangerous concentration in a confined space. Carbon monoxide **must** be continuously tested when there is the potential for these situations to exist.
- **Carbon dioxide ($CO_2$):** Carbon dioxide can occur naturally in production. It may also be used in some fire extinguishing systems, and may be used as the inert gas for process system purging. Although nontoxic, it can cause death by asphyxiation. Carbon dioxide is heavier than air, and can accumulate in basements, pits, or other low points. If its presence is suspected, gas testing and thorough ventilation is required prior to confined space entry.
- **Nitrogen ($N_2$):** Nitrogen is used extensively to preserve or purge equipment. Although nontoxic, it can cause death by asphyxiation. Nitrogen is slightly lighter than air. If its presence is suspected, testing for $O_2 \geq 19.5\%$ to $\leq 23.5\%$ and thorough ventilation is required prior to confined space entry.

*Continued*

DocuSign Envelope ID: DBC83A32-C98A-4963-9E1E-44593247DA33



## General Gas Testing Practices, Continued

**Gas tester qualifications**

Gas testing is performed by an Authorized Gas Tester. Continuous monitoring can be assigned to a member of the work team.

The Authorized Gas Tester **must**:

- Have received gas testing training and be deemed competent in gas test requirements.
- Be trained and competent in the use and functionality of the gas detection equipment.
- Be knowledgeable of the potential atmospheric hazards and conditions.
- Be knowledgeable of the testing requirements for testing plan to include the equipment, area, and specific test locations (e.g. flanges, bleeds, vents, low points).

In some instances, gas testing can be performed by the Permit Holder for lower risk activities provided the following conditions are adhered to:

- **Short-term, lower-risk activities:** This includes use of a camera, opening junction boxes, and so forth. A continuous gas testing device will be provided to the individual only after the individual:
  - Receives a demonstration on the correct operation of the gas test device by the AGT (alarms, not to cover the sensing point, care of the unit, and so forth).
  - Can demonstrate the correct operation of the device back to the AGT
  - Is aware or briefed on what hazards to look for.
  - Can explain what actions are to be taken if the gas detector alarms.
- **Short-or long-term, higher-risk activities:** An Authorized Gas Tester (AGT) **must** conduct the test.

DocuSign Envelope ID: DBC83A32-C98A-4963-9E1E-44593247DA33



# 5.3 Using Electronic Gas Testers

**Introduction**

This section describes the general practices to be reviewed when using portable electronic gas detectors. Model-specific operation instructions **must** be reviewed by the users.

**Operational checks**

Users are to perform a functional check in a "clean" atmosphere to ensure cells are not contaminated followed by a bump test against a known gas concentration. As a minimum, these tests **must** be performed once per shift before use.

**General practice**

Follow this general practice when using portable electronic gas detectors:

- Check the battery level.
- Balance the instrument according to manufacturer's instructions.
- If an extension tube or hose is used, allow enough time for the sample gas to reach the sensor. Establish a time by testing and timing on a known source of gas.
- Begin aspirating on approach, not after the probe or tester is inserted into the gas. Watch the meter at all times.
- On manually aspirated models, confirm that check valves are fitted on the inlet and outlet of the bulb, and they are functioning properly.

**Calibration**

Calibration of the portable electronic gas detectors **must** be performed either by the supplier or by competent personnel in accordance with the supplier's calibration instruction.

The calibration process **must** include the following activities:

- Conduct an inspection and calibration of all portable electronic gas testers as per manufacturer’s recommendations to include:
  - Function control of the instruments
  - Calibration of the instruments
  - Cleaning the instruments
  - A test against a known concentration of gas
  - Approval of the instruments for use
- Records of inspection, calibration and maintenance **must** be maintained for each piece of gas detection equipment.

  Note: Portable electronic gas detectors must have unique identification numbers stamped on them.
- Place sticker on each portable electronic gas detector (or have information available) indicating the last date of calibration. Any gas detectors not serviced within the period **must not** be used.

*Continued*

DocuSign Envelope ID: DBC83A32-C98A-4963-9E1E-44593247DA33



## Using Electronic Gas Testers, Continued

**Maintenance**

Gas detector maintenance **must** be performed by qualified personnel using the manufacturer's recommendations.

**Precautions**

When using portable electronic gas detectors, follow these precautions:

- Do not immerse the probe or detector into liquid.
- Use of the gas detector for long periods of time in high gas concentration areas may damage the filament. In this case the instrument **must** be calibrated against a known gas source more frequently to confirm it is working properly.
- The gas to be tested **must** be at atmospheric pressure when aspirated through the tester. Do not force the mixture through the detector.
- Do not use portable electronic gas detectors near raw (high concentration) oxygen, hydrogen, or acetylene as the instrument may ignite the gas.
- Be aware of the accuracy range of detectors and use the results accordingly.
- If it is suspected that the detector controls are damaged or not operating properly, the unit **must** be returned for maintenance and a new, calibrated unit used.
- Do not place the unit in your pocket or otherwise cover the gas detector inlet.

DocuSign Envelope ID: DBC83A32-C98A-4963-9E1E-44593247DA33



# 5.4 Using Tube Detectors

**Introduction**

This topic describes the general practices to be followed when using tube-type gas detectors. Operation and storage instructions supplied from the manufacturer **must** be reviewed by the users.

**Storing tube detectors**

Adhere to the following precautions regarding the storage of tube detectors:

- Tube detectors have a limited shelf life. Check the expiration date of all packets and return or discard expired packets.
- Store tubes per manufacturer's recommendations

**General practice**

When using tube-type gas detectors:

- Confirm the tube is within its expiration date.
- Select the appropriate tube for the job, based on the expected conditions and the gas to be tested.
- Read the manufacturer's instruction sheet and verify it is the correct instruction for the tube model selected.

  ! **IMPORTANT:** Consider what other contaminants may be present that can affect the results. Read the manufacturer's instruction sheet on interferences (cross-sensitivity). Choose the correct tube or tubes.

- Verify that the pump or bellows does not leak before each use by holding a vacuum on an unbroken tube. Refer to the manufacturer's Operating Instructions Manual.
- Break both ends of the tube and insert it into the pump with the arrowhead mark towards the pump. Be careful not to allow liquids to enter the tube. Do not break tube tips until immediately before using.

  ! **IMPORTANT:** Some tubes can be used again after a negative test. Some **must** be discarded. Check the manufacturer's instruction sheet for specific details.

- Check the atmosphere at the operator breathing zone first, actuating the pump the correct number of full strokes. Failure to wait until the chain tightens will cause a low reading and, hence, a possible false sense of security. If in doubt, perform another test.
- Do not mix different manufacturers' pumps and tubes. The volume of a gas tested can differ and affect the reading.
- A Dräger carbon pretube should be used if checking for carbon monoxide where fairly high concentrations of hydrocarbon gases may be present. The charcoal in the pretube will absorb gases such as propane and butane that would otherwise interfere with the reading.

DocuSign Envelope ID: DBC83A32-C98A-4963-9E1E-44593247DA33



# 6.0 Simultaneous Operations

## Overview

**Introduction**

Many different operations are periodically conducted on offshore production platforms and onshore plants, facilities, and fields. Wherever possible, operations should be managed to avoid situations where simultaneous operations (SIMOPS) are required, however at times, it may be necessary to perform critical operations simultaneously. This section provides information on how to safely manage routine and nonroutine SIMOPS. It provides the following:

- Basis for safe performance of these operations
- Common approach to routine SIMOPS on the Company facilities
- Consistent approach to the planning and execution of nonroutine SIMOPS on the Company facilities
- Identifies work that cannot performed at the same time

Adherence to the requirements set forth in the Permit to Work System in this manual, as well as Company and government requirements, is intended to reduce the risks associated with the performance of SIMOPS to an acceptable minimal level. The safety requirements for activities associated with all operations **must** be reviewed by the Site Person in Charge (PIC) and adhered to during SIMOPS.

*Continued*

DocuSign Envelope ID: DBC83A32-C98A-4963-9E1E-44593247DA33



## Simultaneous Operations, Continued

**SIMOPS definitions**

The following definitions are used for simultaneous operations:

- **Simultaneous operations:** Are separate Job Scopes of Work that take place at the same time and meet both of the following conditions:
  - Are in the same area.
  - Directly or indirectly could potentially affect the safe performance of any other activity at the facility.

SIMOPS can be *routine* or *nonroutine*.

- **Routine SIMOPS:** Simultaneous operations that meet both of the following requirements. All activities are:
  - Identified on the SIMOPS Matrix.
  - Covered by existing, approved written instructions or procedures (or Procedure Checklist).
  - **Nonroutine SIMOPS:** SIMOPS not covered by the matrix or detailed work execution plan **must** be reviewed by appropriate subject matter experts and approved by management.
  - Well Control Operations are nonroutine and are not listed explicitly in the SIMOPS matrix or table. Work execution unrelated to the well control operation that is concurrent, **must** be reviewed and approved by site management in charge of well control operations before the unrelated work is allowed to continue.
- **Site PIC:** The Site Person in Charge (PIC), is the individual responsible for safely executing all operations at any given site.

**Applicability**

These simultaneous operations guidelines were prepared to comply with Operations Integrity Management System (OIMS) System 6-4 Work Management and are consistent with the requirements of the *Upstream Safety Manual*.

*Continued*

DocuSign Envelope ID: DBC83A32-C98A-4963-9E1E-44593247DA33



## Simultaneous Operations, Continued

**In this section**

This section contains the following information:


**6.1 SIMOPS Process ..... 6-4**

6.1.1 SIMOPS Activities ..... 6-5
6.1.2 SIMOPS Definitions ..... 6-6
6.1.3 SIMOPS Matrix ..... 6-13
6.1.4 SIMOPS Restrictions Tables ..... 6-19

**6.2 Routine SIMOPS Job Planning ..... 6-38**

**6.3 Nonroutine SIMOPS Job Planning ..... 6-39**

6.3.1 Job Execution ..... 6-42

**6.4 Tools ..... 6-43**

6.4.1 SIMOPS Decision Matrix ..... 6-43
6.4.2 SIMOPS Deviation Request and Approval Form ..... 6-43

**Figure 6-1** Example SIMOPS Matrix ..... **6-16**
**Figure 6-2** Classification of Simultaneous Activities on the SIMOPS Matrix ..... **6-17**
**Figure 6-3** Planning Process for Nonroutine SIMOPS ..... **6-39**

**Table 6-1** SIMOPS Activities ..... **6-5**
**Table 6-2** SIMOPS Definitions ..... **6-6**
**Table 6-3** SIMOPS Restrictions Tables ..... **6-20**
**Table 6-4** Deviation Request ..... **6-38**
**Table 6-5** SIMOPS Keyword Tool ..... **6-41**

DocuSign Envelope ID: DBC83A32-C98A-4963-9E1E-44593247DA33



# 6.1 SIMOPS Process

**Introduction**

The number of operations that can be conducted simultaneously on the same structure depends on various factors such as:

- Type and size of the intended activity
- Location of the proposed work in relation to other activities being performed
- Duration of the work effort
- Impact of the activities on the overall operations

These considerations **must** be thoroughly discussed and a decision made on the number of operations that can be performed simultaneously without jeopardizing safety to personnel, the environment, and the facility.

In addition to evaluating the risk associated with each operation, compliance with related Company policies, safety rules, regulatory requirements and other safe work guidelines is mandatory. In some instances, these requirements may prevent certain operations from being performed simultaneously.

Adherence to the requirements set forth in the Permit to Work System in this manual, as well as to other applicable Company and regulatory requirements, is intended to reduce the risks associated with the performance of simultaneous operations to an acceptable minimal level. The safety requirements for activities associated with operations **must** be reviewed by the Site PIC and adhered to during simultaneous operations.

DocuSign Envelope ID: DBC83A32-C98A-4963-9E1E-44593247DA33



## 6.1.1 SIMOPS Activities

**SIMOPS activities**

The activities that comprise SIMOPS operations are listed in the following table.

Table 6-1 SIMOPS Activities

| SIMOPS Activities | |
|---|---|
| Operations | Painting and Coating Operations |
| | Confined Space Entry |
| | Crane Activities or Critical Lifts (or both) |
| | Engine-Driven Equipment and Vehicles |
| | Fire System Inoperable |
| | Hot Work |
| | Hydrocarbon Source Activity |
| | Pigging Operations |
| Marine | Boat Operations |
| | Derrick Barge |
| | Diving Operations |
| | Remotely Operated Vehicle (ROV) Operations |
| Wellwork | Blowout Preventer (BOP) Movement |
| | Coiled Tubing Unit |
| | Drilling or Workover |
| | Electrically Fired Explosives Operations |
| | Rig Skid |
| | Snubbing Operations |
| | Well Control |
| | Well Stimulation |
| | Wireline Operations |
| Other Potential Adds | Critical Casing Pressure |
| | Specified Night Operations |
| | Flammable Product Transfer |
| | Hull Maintenance/Inspection |
| | Tanker Loading or Unloading |
| | Helicopter Operations |
| | Lifeboat testing unavailable |
| | Others as required by each Production Unit |

DocuSign Envelope ID: DBC83A32-C98A-4963-9E1E-44593247DA33



## 6.1.2 SIMOPS Definitions

**Terms and definitions**

This topic presents definitions of the terms used in the SIMOPS Matrix and the SIMOPS Restrictions Tables.

Table 6-2 SIMOPS Definitions

| Term | Description |
|---|---|
| abrasive blasting | High-velocity air that is carrying sand or other abrasive particles to clean metal surfaces. |
| adjacent wells | Those wells that are located in any of the four quadrants bordering the well being worked on. |
| boat operations | Any activity involving marine vessel operations.<br>Note: The loading and unloading of supply vessels are considered to be a Crane Activity. |
| BOP stack | Abbreviation for blowout preventer (BOP) stack or an assembly of heavy-duty valves attached to the top of the wellhead or tree to control well pressure. |
| BOP stack movement | Any time the BOP stack is moved from the storage area or wellhead, including rigging up or rigging down. |
| Coating Operations (activities) | Any activities to remove coatings from, or place coatings onto equipment. Coating activities include:<br>▪ Spray painting<br>▪ Abrasive blasting<br>▪ Installing insulation, such as fiberglass |
| crane activities | Any activities where a crane is used to raise, move, or lower a load.<br>Note: Loads moved by a derrick barge are considered to be a *derrick barge* activity.<br>**Reference:** Crane activities **must** be supervised in compliance with the *Crane and Lifting Gear Manual.* Note: Located on the EM Intranet in the Production Reference Manual (PRM). |
| critical casing pressure | Refer to the Well Integrity Manual “Maximum Allowable and Operating Annulus Surface Pressures”<br>**Reference:** Appendix A.4 “Annulus Trigger Pressures”. |
| CTU | coiled tubing unit |
| designated safe welding area | An area at the facilities, pre-approved by the Company, that does not require special preparation to provide isolation either horizontally or vertically from hazardous areas to allow hot work. |

*Continued*

DocuSign Envelope ID: DBC83A32-C98A-4963-9E1E-44593247DA33



# SIMOPS Definitions, Continued

**Terms and definitions**, continued

| Term | Description |
|---|---|
| drilling | The actual work process, performed by the drilling rig that involves circulation of fluid or movement of tubulars in the wellbore. |
| engine-driven equipment and vehicles | Any equipment powered by an internal combustion engine including vehicles.<br>! **WARNING:** These items are a potential source of ignition and exhaust gas emissions contain carbon monoxide that is hazardous for a confined space atmosphere. |
| electrically fired explosives operations | Includes any operation that sets off an explosive charge by electrical signal, such as perforating, chemical cutters, tubing punches, setting bridge plugs, or permanent packers. Usually, but not limited to wellwork activities.<br>! **IMPORTANT:** A radio-safe detonating system uses a radio-safe blasting cap or electro-explosive that does not require radio silence. If radio-safe detonation systems are used, the PIC **must** determine if this mitigates the SIMOPS identified hazard(s), and renders the SIMOPS situation "not applicable."<br>**Reference:** EMPC *WellWork Execution Manual* |
| electric line | Electric or conductor line protected by one or more layers of steel braid or armor. It is generally utilized for conveyance of electrically fired explosives operations, well logging operations, or mechanical runs. |
| ESD (emergency shutdown) | A system of manual stations located throughout the platform or facility, which, when activated, initiate a shutdown of the production processes. |
| firewater system inoperable | Whenever the firewater system is unable to deliver the rated capacity of a single pump, or the system is out of service in the area of the work. |
| fire protection system inoperable | Whenever the fire protection system is out of service in the area of the work. Fire protection system can be firewater system, deluge, dry chemical, and so forth that is determined to be safe and adequate for the foreseeable risk of the activity or the area. |

*Continued*

DocuSign Envelope ID: DBC83A32-C98A-4963-9E1E-44593247DA33



# SIMOPS Definitions, Continued

**Terms and definitions**, continued

| Term | Description |
|---|---|
| flammable product transfer | Transfer of flammable products using hose lines such as between facility and boat, and refueling. |
| flowline | Piping that directs the well stream from the wellhead to the first downstream process component. |
| Gemoco® unit | An automatic wireline unit used to cut paraffin in a wellbore. |
| hull maintenance and inspection | Regulatory or integrity required inspection of vessel hull. |
| lifeboat testing | Regulatory or integrity required testing of lifeboat or key components. |
| major activity | A significant work effort that may have an impact on simultaneous operations, such as welding while drilling and producing. |
| MIRU | Abbreviation for move in and rig up—usually associated with an onshore modular drilling rig, a coiled tubing unit, or a snubbing unit. |
| MOB/DEMOB | mobilization/demobilization<br>Critical lifts activities associated with the movement of equipment during rig up or rig down operations—usually associated with a major piece of offshore equipment, such as a modular drilling rig, a coiled tubing unit, or a snubbing unit. a |
| nonrig wireline work | Wireline work performed on any well that is not rig-related and positioned directly under the rotary of the rig. |
| operation | Any activity that directly or indirectly affects the safe performance of any other activity at the location. |
| paraffin cutter | Sometimes referred to as Gemoco® unit or automatic paraffin cutting unit. The unit is an automatic wireline unit which is manually started by an operator and automatically cuts paraffin to a preset depth, spools back up, and turns off. |

*Continued*

DocuSign Envelope ID: DBC83A32-C98A-4963-9E1E-44593247DA33



# SIMOPS Definitions, Continued

**Terms and definitions**, continued

| Term | Description |
|---|---|
| partial operating facility | When the production operations involve continuous production separation or pumping, but is less complex than full facilities. |
| perforating | The process of arming a perforating gun on the surface, lowering it into the wellbore, and detonating charges into the formation at the desired location. Perforating operations are considered to be ongoing until the assembly is safely retrieved at the surface. |
| pigging | Using pressure and flow to push a device (for cleaning, dewatering, separating, or inline inspection) through a pipeline or flowline. *For SIMOPS, a critical operation is opening the pig trap door to the atmosphere to insert or remove a pig.* |
| pipeline | Piping that directs hydrocarbon fluids or gases between platforms or to a shore facility. |
| potential source of hydrocarbon leak | Equipment that either contains or has contained hydrocarbons and the potential for discharge (flanges, connections, relief or vent points, valves, and so forth) is present. |
| producing | The phase of operations where well fluids or gases are brought to the surface or received via pipelines from another facility to be separated, processed, and delivered into departing pipelines. |
| prohibited | Prohibited is defined for two SIMOPS uses:<br>▪ **SIMOPS Matrix:** A combination of activities that are not allowed to be conducted concurrently. No deviations are allowed.<br>▪ **SIMOPS Restrictions Tables:** A specified condition under which a combination of activities are not allowed to be conducted concurrently. No deviations are allowed. |
| PSHH or PSLL | Pressure switch high-high or pressure switch low-low. A safety device that detects abnormal pressure (high or low) and transmits a signal to perform a shut-in function. |

*Continued*

DocuSign Envelope ID: DBC83A32-C98A-4963-9E1E-44593247DA33



# SIMOPS Definitions, Continued

**Terms and definitions**, continued

| Term | Description |
|---|---|
| quick-release fusible lock-out device | Fusible lock-out for a surface safety valve (SSV) that features a releasing mechanism that can be remotely activated to enable the SSV to close upon loss of pneumatic ESD system pressure. See *SSV*. |
| radio-safe detonating system | A radio-safe detonating system uses a radio-safe blasting cap or electro-explosive that does not require radio silence. If radio-safe detonation systems are used in electrically fired explosives operations, the PIC **must** determine if this mitigates the SIMOPS identified hazard(s), and renders the SIMOPS situation not applicable. I |
| rig skid | To move the rig from one well location to another with minimal or no dismantling of equipment. |
| rig-related | Wellwork performed in a well that is rig-related and has equipment positioned on the drilling rig (directly under or over the rotary). |
| ROV (remotely operated vehicle) | A submersible vehicle controlled from the surface by a tether that is able to send pictures and data to the surface and perform limited activities underwater. |
| safety device | A device that detects an abnormal operating condition and transmits a signal to perform a specific shutdown function. |
| SCSSV (surface-controlled subsurface safety valve) | A device installed in a well below the wellhead, SCSSVs are controlled from the surface by hydraulic, electric, mechanical, or other means, with the design function to prevent uncontrolled well flow when actuated. |
| SSV (surface safety valve) | An automatic wellhead valve assembly that closes upon loss of power supply caused by, for example, a PSHH, PSLL, or ESD). |
| shut in | Shut down or stop an operation. |
| site-specific station bill | A supplemental or amended *station bill* that describes emergency response responsibilities for all personnel at a location where simultaneous operations are to be conducted. |

*Continued*

DocuSign Envelope ID: DBC83A32-C98A-4963-9E1E-44593247DA33



# SIMOPS Definitions, Continued

**Terms and definitions**, continued

| Term | Description |
|---|---|
| snubbing | A wellwork process by which concentric pipe is inserted into a well under pressure. Snubbing can be utilized as part of a routine well workover procedure or nonroutine as needed during well control response. |
| subsea maintenance | Subsea maintenance is diving-based or ROV-based inspection of the structural integrity of underwater or splash zone structural components. |
| tanker loading or unloading | Tanker transfer operations generally for product sales, specifically, crude oil or liquefied natural gas (LNG). |
| TCP | tubing conveyed perforating |
| TIW valve | Brand name for a quarter-turn, full-bore ball valve that can be installed on drill pipe or a workstring. |
| tree-on BOP stack | The BOP stack used when the Christmas tree is installed on the tubing head. |
| tree-removed BOP stack | The BOP stack used when the Christmas tree is not installed on the tubing head or the wellhead. |
| undesignated welding area | An area that requires special preparation to provide horizontal and vertical isolation from hazardous areas (for example, wells or process equipment) before performing hot work. Sometimes requires shutting in an operation. |
| unprotected lubricators | When the wireline lubricator is located at or above the top (drill) deck of an offshore platform. |
| unprotected process equipment | Process equipment not protected by a solid steel deck. |

*Continued*

DocuSign Envelope ID: DBC83A32-C98A-4963-9E1E-44593247DA33



# SIMOPS Definitions, Continued

**Terms and definitions**, continued

| Term | Description |
|---|---|
| Wellbore Risk Management (WBRM) Team | Team consisting of:<br>▪ Subsurface Engineer<br>▪ WBRM Coordinator<br>▪ Offshore Installation Manager (OIM) or Site PIC<br>▪ Operations Superintendent<br>▪ Operations Manager |
| well control problem (drilling or workover) | Unplanned insufficient hydrostatic weight to overbalance the formation pressure resulting in pressure or flow on the surface, and operations to correct the situation. Generally refers to a situation where there is a tree-removed BOP stack on the well rather than a Christmas tree. |
| well control problem (producing) | Loss of surface or subsurface pressure containment on a well with a Christmas tree installed. |
| well control operations | Operations to correct *well control problems*. These operations can include pumping fluids, snubbing operations, coiled tubing operations, or wireline operations and are considered nonroutine. |
| well stimulation | The pressure phase of stimulating a well. |
| wireline operations | For the purposes of utilizing this SIMOPS matrix and tables, *wireline operations* includes downhole work involving wireline, slickline, or braided line. *Does not include* electrically fired explosive operations. |
| workover | The actual work process performed by the workover rig that involves circulating fluid downhole, or any movement of tubulars in the wellbore. Can also include routine snubbing or coiled tubing operations when not involved in well control response. |

DocuSign Envelope ID: DBC83A32-C98A-4963-9E1E-44593247DA33



## 6.1.3 SIMOPS Matrix

**SIMOPS matrix**

The Simultaneous Operations Decision Matrix (SIMOPS Matrix) is a quick reference tool to indicate whether activities can be performed simultaneously. A number of activities are identified that require additional consideration when conducted simultaneously. This matrix is not a stand-alone document and **must** be used in conjunction with the associated tables, potential differences in facilities or operations, and other work management control tools including the judgment of the operations team. Each Production Unit should develop specific matrices and associated tools as necessary to meet their specific regulatory requirements or unique operational aspects not addressed in this matrix.

The applicable restrictions **must** be followed or they require approval from the appropriate level of management. These restrictions and approval levels are listed in the SIMOPS Restrictions Tables presented in this section.

**References:**

- Figure 6-1, Example SIMOPS Matrix
- Section 6.4, "Tools," SIMOPS Matrix (Production Unit specific)
- Section 6.1.4, "SIMOPS Restrictions Tables"
- EMPC *WellWork Execution Manual*
- *Crane and Lifting Gear Manual*

  Note: Located on the EM Intranet in the Production Reference Manual (PRM).

*Continued*

DocuSign Envelope ID: DBC83A32-C98A-4963-9E1E-44593247DA33



## SIMOPS Matrix, Continued

**SIMOPS matrix classes**

The SIMOPS Matrix is a chart with predefined activities showing the class of the SIMOPS to which the combination of the two activities is assigned. These classes are:

| | |
|---|---|
| P | Simultaneous activities are *prohibited*. They will *not* be performed. No deviations are allowed. |
| R | Simultaneous activities may be *restricted*. The restrictions in the SIMOPS Restrictions Tables **must** be met where applicable. Written authorization from the Site PIC (Level 1), Operations Superintendent (Level 2), or Operations Manager (Level 3) **must** be obtained to deviate from the restrictions. |
| A | Simultaneous activities are *allowed* using normal procedures and instructions. |
| X | Simultaneous activity combinations are not applicable. |

**Assessment considerations**

The SIMOPS matrix is based on Risk Assessments of routine SIMOPS. These assessments consider:

- Potential conflicts with one another in normal or emergency situations
- Nature of potential risks and hazards
- Causal factors and consequences from simultaneous operations

*Continued*

DocuSign Envelope ID: DBC83A32-C98A-4963-9E1E-44593247DA33



## SIMOPS Matrix, Continued

**Using the SIMOPS Matrix**

Use the following steps for the SIMOPS Matrix:

- Identify the activities to be performed. The activities are based on the Job Scope and not all tasks within the scope.
- Enter both operations on the SIMOPS Matrix and locate the:
  - Activity that is closest to the bottom on the alphabetical axis.
  - Other activity on the numeric axis.
- Arrive at a SIMOPS classification:
  - Prohibited
  - Restricted
  - Allowed
  - Not applicable
- The color of the square where they intersect indicates whether the two operations can be conducted simultaneously, or if a conflict in activities exists requiring additional approval.

  ! **IMPORTANT:** When evaluating the simultaneous execution of more than two activities, every combination of two activities **must** be evaluated on the SIMOPS Matrix.

- The combination that yields the most restrictive SIMOPS classification is the classification for the planned SIMOPS.

The SIMOPS Matrix **must** be used in conjunction with the following:

- The written procedures, practices and instructions for each activity
- The precautions listed on the Work Permits and the Permit Pack
- SIMOPS Restrictions Tables

  ! **IMPORTANT:** The SIMOPS Matrix is designed as a reference tool, not as a stand-alone tool. It **must** be used in conjunction with the SIMOPS Restrictions Tables.

- The following approval levels **must** be obtained to deviate from the restrictions and perform the activities simultaneously:
  - Level 1 - Site PIC
  - Level 2 - Operations Superintendent
  - Level 3 - Operations Manager

  Note: Refer to Table 6.3 for Level 1, 2 & 3 Restriction designations

*Continued*

DocuSign Envelope ID: DBC83A32-C98A-4963-9E1E-44593247DA33



## SIMOPS Matrix, Continued

**Example SIMOPS matrix**

Use the following SIMOPS Matrix as a reference to the text in this section.

Each Production Unit may have its unique SIMOPS Matrix which will be located as a separate file in the local Addendum.

Figure 6-1 Example SIMOPS Matrix

| Simultaneous Operations Decision Matrix<br>- Normal producing operations assumed -<br>NOTE! Well Control Operations is non-routine SIMOPS<br>This Matrix must be used in conjunction with the SIMOPS Restriction Tables | | | 1 Coating Operations | 2 Confined Space Entry | 3 Crane Activities | 4 Engine-Driven Equipment/Vehicles | 5 Fire Protection System Inoperable | 6 Hot Work | 7 Hydrocarbon Source Activity | 8 Pigging Operations | 9 Boat Operations | 10 Derrick Barge | 11 Diving Operations | 12 ROV Operations | 13 BOP Movement | 14 Coiled Tubing Unit | 15 Drilling or Workover | 16 Electrical Fired Explosives Operations | 17 Rig Skid | 18 Well Stimulation | 19 Wireline Operations |
|---|---|---|---|---|---|---|---|---|---|---|---|---|---|---|---|---|---|---|---|---|---|---|
| Operations | Coating Operations | A | 1 | 2 | 3 | 4 | 5 | 6 | 7 | 8 | 9 | 10 | 11 | 12 | 13 | 14 | 15 | 16 | 17 | 18 | 19 |
| | Confined Space Entry | B | R | 2 | | | | | | | | | | | R | SIMOPS Restricted | | | | | |
| | Crane Activities | C | R | R | 3 | | | | | | | | | | P | SIMOPS Prohibited | | | | | |
| | Engine-Driven Equipment and Vehicles | D | R | R | A | 4 | | | | | | | | | A | SIMOPS | | | | | |
| | Fire Protection System Inoperable | E | R | R | R | R | 5 | | | | | | | | X | N/A | | | | | |
| | Hot Work | F | R | R | R | A | P | 6 | | | | | | | | | | | | | |
| | Hydrocarbon Source Activity | G | R | R | R | R | R | R | 7 | | | | | | | | | | | | |
| | Pigging Operations | H | R | R | R | R | R | R | A | 8 | | | | | | | | | | | |
| Marine | Boat Operations | I | A | A | A | A | R | A | A | A | 9 | | | | | | | | | | |
| | Derrick Barge | J | R | A | R | A | R | A | R | R | A | 10 | | | | | | | | | |
| | Diving Operations | K | R | R | P | R | R | R | R | R | R | R | 11 | | | | | | | | |
| | ROV Operations | L | A | R | R | A | A | A | A | A | A | R | R | 12 | | | | | | | |
| WellWork | BOP Movement | M | R | R | R | R | R | R | A | A | A | R | R | R | 13 | | | | | | |
| | Coiled Tubing Unit | N | R | R | R | R | R | R | R | R | A | P | R | R | R | 14 | | | | | |
| | Drilling or Workover | O | R | R | R | R | R | R | R | R | A | R | R | R | X | A | 15 | | | | |
| | Electrically Fired Explosives Operations | P | R | P | P | R | P | P | P | P | P | P | P | P | P | P | R | 16 | | | |
| | Rig Skid | Q | R | P | R | A | R | A | P | P | A | P | R | R | X | P | X | P | 17 | | |
| | Well Stimulation | R | R | R | R | R | R | R | A | A | A | P | P | R | R | R | R | R | R | 18 | |
| | Wireline Operations | S | R | R | R | R | P | R | R | R | A | R | P | R | R | R | R | R | R | R | 19 |
| | | | 1 | 2 | 3 | 4 | 5 | 6 | 7 | 8 | 9 | 10 | 11 | 12 | 13 | 14 | 15 | 16 | 17 | 18 | |

*Continued*

DocuSign Envelope ID: DBC83A32-C98A-4963-9E1E-44593247DA33



## SIMOPS Matrix, Continued

**Flowchart** Use this flowchart for classifying two simultaneous activities on the SIMOPS Matrix.

Figure 6-2 Classification of Simultaneous Activities on the SIMOPS Matrix

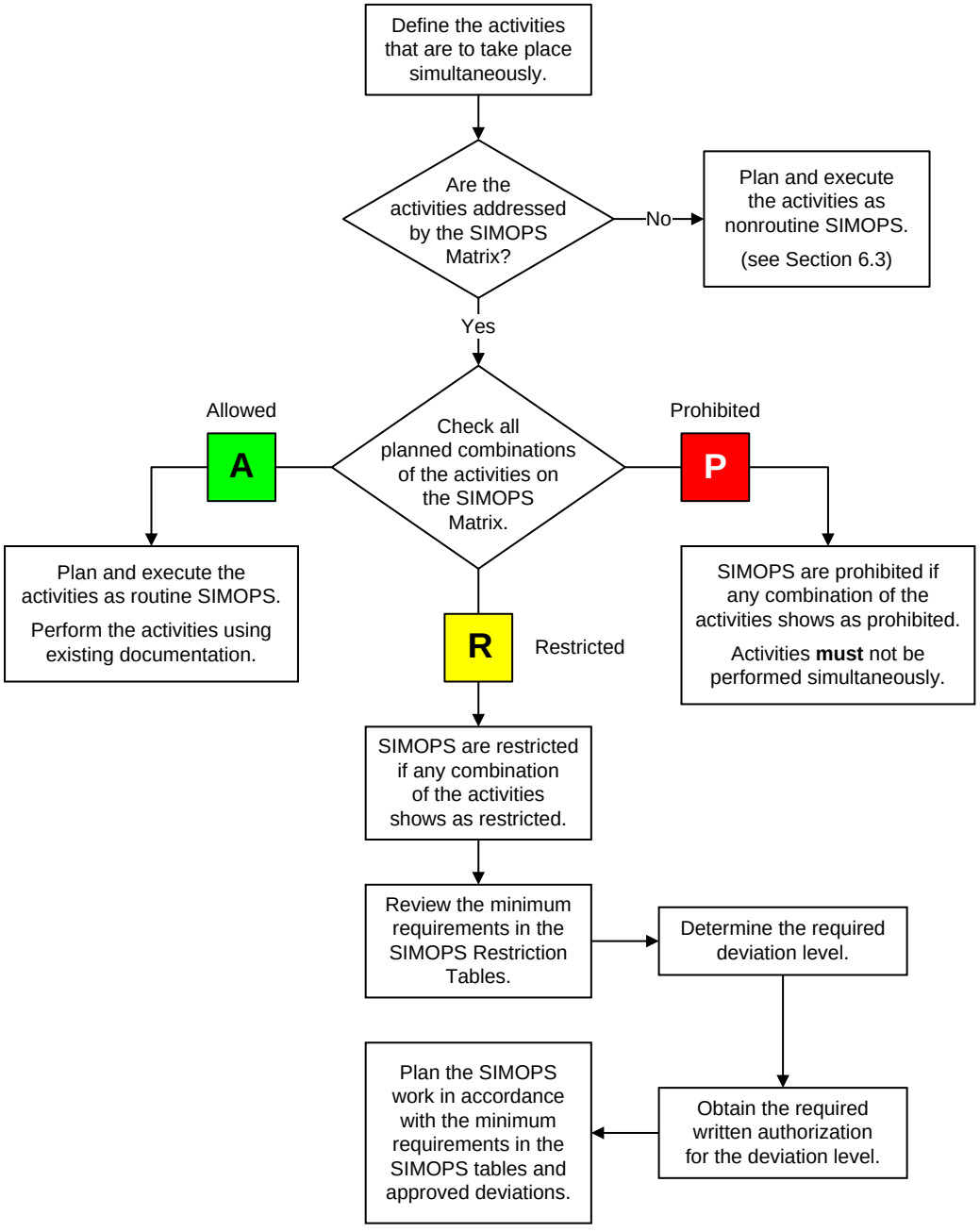


*Continued*

DocuSign Envelope ID: DBC83A32-C98A-4963-9E1E-44593247DA33



## SIMOPS Matrix, Continued

**More than two SIMOPS activities**

In cases where more than two SIMOPS activities are being considered at the same time, all possible combinations of these activities **must** be considered.

All SIMOPS activities **must** be plotted on the matrix for each simultaneous combination. Restriction tables are applied for every matrix point and all controls outlined **must** be applied for application. Any restriction that cannot be met **must** be managed through the SIMOPS Deviation Request Form.

**Reference:** Section 6, "Tools," SIMOPS Deviation Request and Approval Form

DocuSign Envelope ID: DBC83A32-C98A-4963-9E1E-44593247DA33



## 6.1.4 SIMOPS Restrictions Tables

**SIMOPS Restrictions Tables: definition and deviations deviations**

The SIMOPS Restrictions Tables list the activity restrictions for managing conflicts between activities identified on the SIMOPS Matrix as "Restricted," and act as a supplement to the matrix. When a combination of activities is classified as restricted and depicted by a yellow box, the SIMOPS Restrictions Tables are to be consulted for guidance related to that particular combination of activities to be conducted.

Restriction Table criteria **must** be assessed and increased if circumstances are not favorable and would increase the risk (for example, wind direction could extend the distance vapor travels).

Should any deviation be required from the rules contained in the SIMOPS Restrictions Tables, the Site PIC, with the input of the Operations Management Team determines the mitigating steps to be taken and confirms that these steps are documented on the SIMOPS Deviation Request Form or equivalent process such as management of change (MOC). This confirms that the mitigation steps are "fit for purpose" for the activities to be conducted at the facility.

! **IMPORTANT:** The SIMOPS Restrictions Tables and associated activity restrictions are not necessarily all inclusive. Supervisory judgment and a Risk Assessment may be required to confirm safe operations.

! **IMPORTANT:** Some restrictions involve situations that are *prohibited*. No deviations are allowed from *prohibited* restrictions.

**Reference:** Section 6, " Tools," SIMOPS Deviation Request and Approval Form

*Continued*

DocuSign Envelope ID: DBC83A32-C98A-4963-9E1E-44593247DA33



## SIMOPS Restrictions Tables, Continued

**SIMOPS Restrictions Tables**

The SIMOPS Restrictions Tables are included on the following pages.

**Reference:** Section 6.4, "Tools," for the SIMOPS Matrix (Production Unit specific)

Table 6-3 SIMOPS Restrictions Tables

| Matrix | Requirement |
|---|---|
| B1 | Abrasive blasting conducted concurrently with confined space entry (CSE) on an offshore installation, or within 82 ft (25 m) or each other onshore, is restricted and requires a Level 1 approval.<br>Spray painting performed within 49 ft (15 m) of openings or ventilation air intakes of any CSE operation, is restricted and requires a Level 1 approval.<br>Fiber-glassing conducted concurrently with CSE on an offshore installation, or within 82 ft (25 m) of each other onshore, is restricted and requires a Level 1 approval.<br>Hazards – Spark potential, fire or explosion, air quality |
| C1 | Coating operations conducted concurrently with crane activities on an offshore installation or within 82 ft (25 m) of each other onshore, are *restricted* and require a Level 1 approval.<br>Abrasive blasting conducted concurrently while a lift is taking place on an offshore installation, or within 82 ft (25 m) of each other onshore, is *restricted* and requires a Level 1 approval.<br>Hazards – Spark potential, fire or explosion, obstructed operator vision, dropped object<br>! **IMPORTANT:** Crane Activities **must** be in accordance with the *Crane and Lifting Gear Manual.*<br>Note: Located on the EM Intranet in the Production Reference Manual (PRM). |
| C2 | CSE conducted concurrently with critical lift crane activities within 85 ft (26 m) is *restricted* and requires a Level 1 approval.<br>Hazards – Dropped object |
| D1 | Engine-driven equipment and vehicles operated concurrently within 49 ft (15 m) of large volume spray coating operations is *restricted* and requires a Level 3 approval.<br>Hazards – Spark potential, fire or explosion |
| D2 | Engine-driven equipment and vehicles operated concurrently with CSE on an offshore installation, or within 49 ft (15 m) of the confined space onshore, are *restricted* and require a Level 1 approval.<br>Hazards – Engine-driven equipment and vehicles are a source of ignition that could ignite hydrocarbons and give off toxic exhaust fumes that create a hazard in a confined space |
| E1 | Major coating operations conducted concurrently with the fire protection system being inoperable on an offshore installation or in the same area onshore are *restricted* and require a Level 3 approval.<br>Hazards – Fire or explosion without fire response |

*Continued*

DocuSign Envelope ID: DBC83A32-C98A-4963-9E1E-44593247DA33



# SIMOPS Restrictions Tables, Continued

**SIMOPS Restrictions Tables**, continued

| Matrix | Requirement |
|---|---|
| E2 | CSE conducted concurrently with the fire protection system (entire) being inoperable on an offshore installation or in the same area onshore is *restricted* and requires a Level 2 approval.<br>Hazard – Safe and timely evacuation in the event of a fire |
| E3 | Critical lifts by stationary or mobile cranes performed concurrently with the fire protection system being inoperable are *restricted* and require a Level 1 approval.<br>Hazard – Dropped object impact with no fire response |
| E4 | Engine-driven equipment and vehicles operated concurrently with the fire protection system being inoperable on an offshore installation or in a hazardous location onshore are *restricted* and require a Level 1 approval.<br>Note: This is generally covered by Permit to Work controls.<br>Hazard – Spark potential with no fire protection response |
| F1 | Large volume spray coating operations conducted concurrently with hot work activities on an offshore installation, or within 85 ft (26 m) of each other onshore, are *restricted* and require a Level 3 approval.<br>Hazards – Fire or explosion |
| F2 | Unrelated hot work conducted concurrently with CSE activities within 85 ft (26 m) is *restricted* and requires a Level 2 approval.<br>! **IMPORTANT:** All Hot Work rules apply for work within a confined space.<br>Hazard – Air quality contamination |
| F3 | Critical lifts performed concurrently with hot work within the process area are *restricted* and require a Level 2 approval.<br>Hazard – Dropping the load and causing a hydrocarbon release |
| F5 | Hot work is *prohibited* while the fire protection system in the affected area is inoperable or there is no alternate fire protection system available.<br>Note: Work can only be performed when additional fire protection is readily available. Fire protection **must** be sufficient for the risk exposure as determined by a formal Risk Assessment. Approval is at a minimum Level 3 or higher in accordance with the unmitigated risk.<br>Hazards – Fire or explosion |
| G1 | Abrasive blasting conducted concurrently with a hydrocarbon source activity on an offshore installation, or within 82 ft (25 m) of each other onshore, is *restricted* and requires a Level 1 approval.<br>Hazards – Spark potential, and fire or explosion |

*Continued*

DocuSign Envelope ID: DBC83A32-C98A-4963-9E1E-44593247DA33



# SIMOPS Restrictions Tables, Continued

**SIMOPS Restrictions Tables**, continued

| Matrix | Requirement |
|---|---|
| G2 | CSE activities conducted concurrently with hydrocarbon source activities within 85 ft (26 m) are *restricted* and require a Level 2 approval.<br>Hazard – Hydrocarbon entering confined space |
| G3 | Crane activities conducted concurrently with hydrocarbon source activity within 85 ft (26 m) are *restricted* and require a Level 1 approval.<br>Hazards – Spark potential from internal combustion engines and non-intrinsically safe electric equipment |
| G4 | Engine-driven equipment and vehicles operated concurrently with hydrocarbon source activity within 85 ft (26 m) are *restricted* and require a Level 1 approval.<br>Hazard – Engine-driven equipment and vehicles are a source of ignition that could ignite hydrocarbons. |
| G5 | Hydrocarbon source activity is *restricted* while the fire protection system is inoperable and requires Level 2 approval.<br>Hazards – Fire or explosion due to spark potential (for example, hot work, engine-driven equipment, and so on) |
| G6 | Hot work is *restricted* from occurring concurrently with hydrocarbon source activity within 85 ft (26 m), and requires a Level 3 approval.<br>Hazards – Fire or explosion |
| H1 | Abrasive blasting conducted concurrently with pigging operations on an offshore installation, or within 82 ft (25 m) of each other onshore, is *restricted* and requires a Level 3 approval.<br>Hazards – Spark potential, fire, or explosion |
| H2 | CSE activities conducted concurrently with pigging operations within 85 ft (26 m) are *restricted* and require a Level 2 approval.<br>Hazards – Air quality, hydrocarbon entering confined space |
| H3 | Crane activities conducted concurrently with pigging operations within 85 ft (26 m) are *restricted* and require a Level 1 approval.<br>Hazards – Spark potential from internal combustion engines and non-intrinsically safe electric equipment |
| H4 | Engine-driven equipment and vehicles operated concurrently with pigging operations within 85 ft (26 m) are *restricted* and require a Level 1 approval.<br>Hazard – Engine-driven equipment and vehicles are a source of ignition that could ignite hydrocarbons |

*Continued*

DocuSign Envelope ID: DBC83A32-C98A-4963-9E1E-44593247DA33



# SIMOPS Restrictions Tables, Continued

**SIMOPS Restrictions Tables**, continued

| Matrix | Requirement |
|---|---|
| H5 | Pigging operations are *restricted* while the fire protection system is inoperable and require Level 2 approval.<br>Hazard – Hydrocarbon release, potential fire or explosion with no fire protection response |
| H6 | Hot work is *restricted* from occurring concurrently with pigging operations within 85 ft (26 m) and requires a Level 3 approval.<br>Hazard – Hydrocarbon release with open flame resulting in fire or explosion |
| I5 | Boat operations carried out in close proximity to a manned offshore installation when the installation's fire protection system is inoperable, are *restricted* and require a Level 1 approval.<br>Hazards – Collision or contact with offshore risers, fire or explosion potential |
| J1 | Coating operations on an offshore installation or on the derrick barge performed concurrently with derrick barge lifts are *restricted* and require a Level 1 approval.<br>Hazard – Dropped object impact |
| J3 | Critical lift – Derrick barge activities within 85 ft (26 m) are *restricted* and require a Level 1 approval.<br>Hazard – Dropped object impact |
| J5 | Derrick barge lifts carried out in close proximity to a manned offshore installation are *restricted* if the installation's fire protection system is inoperable and require a Level 2 approval.<br>Hazards – Fire and explosion due to contact with offshore risers |
| J7 | Hydrocarbon source activity conducted when the derrick barge boom is directed toward the platform, and the derrick barge is within 500 ft (150 m) of an offshore installation, is *restricted* and requires a Level 2 approval.<br>Hazards – Fire or explosion |
| J8 | Pigging operations conducted when the derrick barge boom is directed toward the platform, and the derrick barge is within 500 ft (150 m) of an offshore installation, are *restricted* and require a Level 2 approval.<br>Hazards – Fire or explosion |
| K1 | Abrasive blasting conducted concurrently with diving operations is *restricted* and requires a Level 3 approval.<br>Hazard – Contaminated air supply |
| K2 | CSE conducted concurrently with diving operations is *restricted* and requires a Level 2 approval.<br>Hazard – Assumes fire protection system inoperable (firewater pumps) due to diving operations. |

*Continued*

DocuSign Envelope ID: DBC83A32-C98A-4963-9E1E-44593247DA33



# SIMOPS Restrictions Tables, Continued

**SIMOPS Restrictions Tables**, continued

| Matrix | Requirement |
|---|---|
| K3 | Any lifts unrelated to the diving activities *that could impact divers in the water or their support equipment on the facility (while in use)* conducted concurrently *with* diving operations are *prohibited*.<br>Hazards –<br>▪ *Objects* dropped into the sea can travel great distances *in unpredictable directions and could strike the divers*.<br>▪ *Dropped object causing damage to divers support equipment onboard the facility while in use (divers in the water or decompression) or damage to production facilities causing a release and potential fire.* |
| K4 | Engine-driven equipment operating in close proximity to the diving operations breathing air compressor intake is *restricted* and requires Level 1 approval.<br>Hazard – Contaminated air supply |
| K5 | Diving operations requiring bypassing of the automatic start function of the firewater system, conducted with all operations except production, are *restricted* and require a Level 2 approval.<br>In order for producing operations to continue, a knowledgeable production person in direct communications with the Diving Supervisor **must** stand vigil over the firewater pump so he or she can alert the Diving Supervisor to get the diver away and, once clear, start the firewater pump.<br>! **IMPORTANT:** The temporary defeat process **must** be used to control bypassing the firewater system. |
| K6 | Hot work conducted concurrently with diving operations assumes fire protection is operable, that is, not dependent on the firewater system.<br>If this is not the case, *go to F5* and apply SIMOPS for fire protection system.<br>Hazard – Fire pump may be inoperable due to proximity of divers to pump intake |
| K7 | Hydrocarbon source activity conducted concurrently with diving operations is *restricted* and requires a Level 1 approval.<br>Hazard – Contamination of diver's air or fire protection system inoperable (or both) |
| K8 | Pigging operations activity conducted concurrently with diving operations are *restricted* and require a Level 1 approval.<br>Hazard – Contamination of diver's air or fire protection system inoperable (or both) |
| K9 | Unrelated boat operations in close proximity conducted concurrently with diving operations are *restricted* and require a Level 1 approval.<br>Hazards – Divers or equipment being struck or impacted by the boat |

*Continued*

DocuSign Envelope ID: DBC83A32-C98A-4963-9E1E-44593247DA33



# SIMOPS Restrictions Tables, Continued

**SIMOPS Restrictions Tables**, continued

| Matrix | Requirement |
|---|---|
| K10 | Unrelated derrick barge operations in close proximity conducted concurrently with diving operations are *restricted* and require a Level 1 approval.<br>Hazards – Divers being struck by the boat or impacted by derrick barge operations |
| L2 | CSE conducted concurrently with ROV operations is *restricted* and requires a Level 2 approval.<br>Hazard – Assumes fire protection (firewater) system inoperable due to ROV operations |
| L3 | Any lifts unrelated to the ROV activities conducted concurrently in the vicinity of ROV operations are *restricted* and require Level 2 approval.<br>Hazard – Dropped object impact—equipment dropped into the sea can travel great distances before hitting bottom. |
| L10 | Derrick barge lifts made in the vicinity of ROV operations are *restricted* and require a Level 1 approval.<br>Hazard – Potential interference with derrick barge or dropped load |
| L11 | Unrelated diving operations in the vicinity of ROV operations and both taking place within facility controlled zone (for example, 500 meter zone) are restricted and require Level 1 approval.<br>Hazard – Potential interference between ROV operations and diver support equipment |
| M1 | Abrasive blasting conducted concurrently with BOP movement operations on an offshore installation, or within 82 ft (25 m) of each other onshore, is *restricted* and requires a Level 1 approval.<br>Hazard – Spark potential in potentially explosive atmosphere |
| M2 | CSE during BOP movement operations and within 85 ft (26 m) is *restricted*, and requires a Level 1 approval.<br>Hazard – Potential interference and dropped object impact to production, drilling, or workover package |
| M3 | Critical lifts within 85 ft (26 m) during BOP movement operations are *restricted* and require a Level 1 approval.<br>Hazard – Potential interference and dropped object impact to production, drilling, or workover package |
| M4 | Engine-driven equipment and vehicles operating concurrently during BOP movement without the wellhead and within 85 ft (26 m), are *restricted* and require a Level 1 approval.<br>Hazards – Spark potential, hydrocarbon release |
| M5 | BOP movement operations conducted in an offshore facility when the fire protection system inoperable are *restricted* and require a Level 3 approval.<br>Hazards – Fire or explosion and open wellbore |

*Continued*

DocuSign Envelope ID: DBC83A32-C98A-4963-9E1E-44593247DA33



# SIMOPS Restrictions Tables, Continued

**SIMOPS Restrictions Tables**, continued

| Matrix | Requirement |
|---|---|
| M6 | Hot work conducted concurrently with tree-removed BOP stack movement within 85 ft (26 m), is *restricted* and requires a Level 1 approval.<br>Hazards – Fire or explosion, open wellbore, potential hydrocarbon source |
| M10 | Derrick barge lifts conducted concurrently with BOP movements are *restricted* and require a Level 2 approval.<br>Hazard – Dual critical lifts, increases supervisory oversight requirements |
| M11 | Diving operations in close proximity of an offshore installation conducted concurrently with BOP movement are *restricted* and require Level 1 approval.<br>Hazards – Dropped object, diver being struck if BOP dropped |
| M12 | ROV operations in close proximity of a fire pump intake while conducted concurrently with BOP movement are *restricted* and require Level 1 approval.<br>Hazards – ROV could obstruct the intake of the fire pump or the fire pump is inoperable. A dropped BOP could contact the ROV |
| N1 | Abrasive blasting conducted concurrently with coiled tubing unit (CTU) work within 82 ft (25 m) is *restricted* and requires a Level 1 approval.<br>Hazard – Spark potential in potentially explosive atmosphere |
| N2 | CSE is *restricted* during CTU operations when using a lubricator within 85 ft (26 m) and requires a Level 2 approval.<br>Hazard – Evacuation of confined space in the event of a hydrocarbon or toxic vapor release<br>Note: Distances may be greater for gas toxicity (such as, $H_2S$). |
| N3 | Critical lifts conducted concurrently with CTU operations when the path of critical lifts is over the coiled tubing or any of the CTU equipment, are *restricted* and require a Level 1 approval.<br>Hazards – Dropped object impact or equipment collision |
| N4 | Unrelated engine-driven equipment and vehicles operated concurrently with CTU work within 85 ft (26 m), are *restricted* and require a Level 1 approval.<br>Hazards – Hydrocarbon release with spark potential and equipment collision |
| N5 | CTU operations conducted in an offshore facility when the fire protection system is inoperable are *restricted* and require a Level 3 approval.<br>Hazards – Gas release and vapor cloud explosion potential |
| N6 | Hot work conducted concurrently with CTU operations within 85 ft (26 m) is *restricted* and requires a Level 2 approval.<br>Hazards – Gas release and vapor cloud explosion potential |

*Continued*

DocuSign Envelope ID: DBC83A32-C98A-4963-9E1E-44593247DA33



# SIMOPS Restrictions Tables, Continued

**SIMOPS Restrictions Tables**, continued

| Matrix | Requirement |
|---|---|
| N7 | Hydrocarbon source activity conducted concurrently with CTU operations within 85 ft (26 m) is *restricted* and requires a Level 1 approval.<br>Hazards – Gas release and vapor cloud explosion potential |
| N8 | Pigging operations conducted concurrently with CTU operations within 85 ft (26 m) are *restricted* and require a Level 1 approval.<br>Hazards – Gas release and vapor cloud explosion potential |
| N10 | Derrick barge lifts are *prohibited* from being performed concurrently with CTU operations.<br>Hazards – Collision of derrick barge crane boom with CTU operations or with platform impacting CTU operations |
| N11 | Diving operations conducted concurrently with CTU operations are *restricted* and require a Level 1 approval.<br>Hazard – Tools or other equipment falling and striking divers |
| N12 | ROV operations in close proximity of a fire pump intake conducted concurrently with CTU operations are *restricted* and require a Level 1 approval.<br>Hazards – ROV could obstruct the intake of the fire pump or the fire pump is inoperable. Tools or other equipment falling and striking the ROV |
| N13 | Unrelated BOP movement conducted concurrently with CTU. Operations are *restricted* and require a Level 2 approval.<br>Hazards – Crane collision, gas release, and vapor cloud explosion potential |
| O1 | Major coating operations conducted concurrently with drilling or workover activities on an offshore platform, or within 82 ft (25 m) of an onshore well site, are *restricted* and require a Level 1 approval.<br>Abrasive blasting conducted concurrently with drilling or workover activities on an offshore installation, or within 82 ft (25 m) of an onshore well site, is *restricted* and requires a Level 1 approval.<br>Hazards – Spark potential with hydrocarbon release potential; explosion or fire |
| O2 | CSE conducted concurrently with drilling or workover operations on an offshore installation, or within 164 ft (50 m) of an onshore drilling rig, during any of the following conditions is *restricted* and requires a Level 1 approval:<br>▪ Workover or live wireline work with open perforations to a hydrocarbon zone (unless the well is secured while the CSE Permit is *live*)<br>▪ Drilling with a hydrocarbon zone open to the wellbore<br>▪ Drilling surface hole<br>Hazards – Gas release and vapor cloud explosion potential with personnel in confined space and restricted escape |

*Continued*

DocuSign Envelope ID: DBC83A32-C98A-4963-9E1E-44593247DA33



# SIMOPS Restrictions Tables, Continued

**SIMOPS Restrictions Tables**, continued

| Matrix | Requirement |
|---|---|
| O3 | Unassociated critical lifts conducted concurrently with drilling or workover operations are *restricted* and require Level 1 approval.<br>Hazards – Critical lift over process, drilling, or workover equipment and potential for impact to concurrent operations (for example, dropped object on compressor package)<br>! **IMPORTANT:** Shift communications processes are key for crane operations concurrent with drilling or workover operations to ensure SIMOPS issues are identified and mitigated.<br>**Reference:** *Crane and Lifting Gear Manual*<br>Note: Located on the EM Intranet in the Production Reference Manual (PRM). |
| O4 | Unrelated engine-driven equipment and vehicles operated concurrently with drilling or workover work within 85 ft (26 m) are *restricted* and require Level 1 approval.<br>Hazards – Hydrocarbon release with spark potential and equipment collision |
| O5 | Drilling or workover activities conducted in an offshore facility when the fire protection system is inoperable are *restricted* and require a Level 3 approval.<br>Hazards – Fire or explosion |
| O6 | Hot work conducted concurrently within 85 ft (26 m) of drilling or workover operations is *restricted* and requires a Level 1 approval.<br>! **IMPORTANT:** On active drilling rig operations, the signature of the Drilling Supervisor and the Site PIC **must** be obtained on Hot Work Permits.<br>Hazards – Hydrocarbon release and potential fire or explosion |
| O7 | Hydrocarbon source activity conducted concurrently with drilling or workover activity within 85 ft (26 m) is *restricted* and requires a Level 1 approval.<br>Hazards – Gas release and vapor cloud explosion potential |
| O8 | Pigging operations conducted concurrently with drilling or workover activity within 85 ft (26 m) are *restricted* and require a Level 1 approval.<br>Hazards – Gas release and vapor cloud explosion potential |
| O10 | Derrick barge lifts conducted concurrently with drilling or workover activities are *restricted* and require a Level 2 approval.<br>Hazard – Collision of derrick barge crane boom with drilling or workover activities |
| O11 | Diving operations conducted concurrently with drilling or workover activities are *restricted* and require a Level 1 approval.<br>Hazard – Tools or other equipment falling and striking the diver(s) |

*Continued*

DocuSign Envelope ID: DBC83A32-C98A-4963-9E1E-44593247DA33



# SIMOPS Restrictions Tables, Continued

**SIMOPS Restrictions Tables**, continued

| Matrix | Requirement |
|---|---|
| O12 | ROV operations in close proximity of a fire pump intake conducted concurrently with drilling or workover activities are *restricted* and require a Level 1 approval.<br>Hazards – ROV could obstruct the intake of the fire pump or the fire pump is inoperable. Tools or other equipment falling and striking the ROV |
| P1 | Coating operations conducted concurrently with electrically fired explosives operations on an offshore installation, or within 82 ft (25 m) onshore, are *restricted* and require a Level 1 approval.<br>! **WARNING:** Static electricity precautions **must** be taken during the coating activities. |
| P2 | CSE activities are *prohibited* from being conducted concurrently with electrically fired explosives operations requiring radio silence.<br>Hazard – Potential lack of communication due to radio silence |
| P3 | Unassociated crane activities are *prohibited* from being conducted concurrently with electrically fired explosives operations requiring radio silence.<br>Hazards – Impact of crane operations into lubricator, e-line, and slick line and lack of communication due to radio silence |
| P4 | Engine-driven and vehicle equipment unassociated with electrically fired explosives operations on an offshore installation, or within 164 ft (50 m) onshore, are *restricted* and require a Level 1 approval.<br>Hazards – Impact to workover equipment, explosion hazard with vapor release, possible electrical interference caused by electric starts, and radio control<br>! **IMPORTANT:** Before using electro-explosive detonators, all radio, radar, cellular, and other signal transmitting equipment within 500 ft (150 m) **must** be identified, located, and shut off.<br>**Reference:** *WellWork Execution Manual*<br>Note: Unassociated engine driven equipment should be equipped with intrinsically safe components if within designated hazardous areas. |
| P5 | Electrically fired explosives operations are *prohibited* at offshore facilities when the fire protection system is inoperable.<br>Hazards – Fire or explosion |

*Continued*

DocuSign Envelope ID: DBC83A32-C98A-4963-9E1E-44593247DA33



# SIMOPS Restrictions Tables, Continued

**SIMOPS Restrictions Tables**, continued

| Matrix | Requirement |
|---|---|
| P6 | Electric welding is *prohibited* from being conducted while running, handling, or pulling electrically fired explosives on surface to the first 300 ft (100 m) below mudline at an offshore location or the first 300 ft (100 m) below the wellhead (surface) at an onshore location (see following reference for additional guidance).<br>Hazards – Welding machine generated electric current could set off electrically fired explosives.<br>! **IMPORTANT:** Before using electro-explosive detonators, all radio, radar, cellular, and other signal transmitting equipment within 500 ft (150 m) **must** be identified, located, and shut off.<br>**Reference:** *WellWork Execution Manual*<br>Hot work is *prohibited* from being conducted concurrently with electrically fired Explosives operations offshore or within 85 ft (26 m) onshore.<br>Hot work conducted concurrently in proximity with electrically fired explosives operations, beyond 85 ft (26 m), and outside designated safe hot work area, is *restricted* and requires a Level 1 approval.<br>Hazards – Spark travel, explosives, and potential of hydrocarbons |
| P7 | Hydrocarbon source activity is *prohibited* while the electrically fired explosive is on surface and the activity is within 164 ft (50 m) of electrically fired explosives operations.<br>Hazards – Noise distraction, radio interference, or vapor cloud resulting in a fire or explosion |
| P8 | Pigging operations are *prohibited* while the electrically fired explosive is on surface and the activity is within 164 ft (50 m) of electrically fired explosives operations.<br>Hazards – Noise distraction, radio interference, or vapor cloud resulting in a fire or explosion |
| P9 | Boat operations within offshore installation safety zone (500 meters) are *prohibited* to be conducted concurrently with armed electrically fired explosives not 300 ft (100 m) or more below the mudline.<br>Hazard – Radio interference with electrically fired equipment |
| P10 | Derrick barge operations within offshore installation safety zone (500 m) are *prohibited* to be conducted concurrently with electrically fired explosives operations.<br>Hazards – Noise distraction or radio interference resulting in electrically fired explosive inadvertently discharging; potential collision with platform |

*Continued*

DocuSign Envelope ID: DBC83A32-C98A-4963-9E1E-44593247DA33



# SIMOPS Restrictions Tables, Continued

**SIMOPS Restrictions Tables**, continued

| Matrix | Requirement |
|---|---|
| P11 | Diving operations are *prohibited* to be conducted concurrently with electrically fired explosives operations (includes pressure detonation) within facility safety zone.<br>Hazards – Radio interference resulting in explosives inadvertently discharging. Fire protection system may be inoperable while divers are in the water. Exposure of divers to premature detonation in less than 300 foot (100 m) below mudline. |
| P12 | ROV operations in close proximity to an offshore installation are *prohibited* to be conducted concurrently with electrically fired explosives operations (includes pressure detonation).<br>Hazards – Radio interference resulting in electrically fired explosive inadvertently discharging. Fire protection system may be inoperable while ROV is in the water. |
| P13 | BOP movement (open hole) is *prohibited* to take place concurrently with electrically fired explosives operations (includes pressure detonation).<br>Hazards – Radio interference resulting in electrically fired explosive inadvertently discharging. Open hole potential for gas release and vapor cloud resulting in a fire or explosion. |
| P14 | CTU operations are *prohibited* to take place concurrently with unrelated electrically fired explosives operations until electrically fired explosive is 300 ft (100 m) below wellhead onshore and below mudline offshore.<br>Hazard – Radio interference resulting in electrically fired explosive inadvertently discharging |

*Continued*

DocuSign Envelope ID: DBC83A32-C98A-4963-9E1E-44593247DA33



# SIMOPS Restrictions Tables, Continued

**SIMOPS Restrictions Tables**, continued

| Matrix | Requirement |
|---|---|
| P15 | Unrelated electrically fired explosives operations conducted concurrently with drilling or workover activities are *restricted* and require a Level 2 approval.<br>The following precautions **must** be taken regarding electrically fired perforating equipment (with electrically fired detonators, normally run on wireline):<br>▪ Only one electrically fired perforating assembly is allowed on an offshore installation or onshore well site at a time.<br>▪ While explosives are being handled, the SIMOPS requirements regarding perforating and hot work (especially electric welding) **must** be followed.<br>▪ Before electrically fired explosives are armed, the most current facility Radio Silence Checklist **must** be completed.<br>! **WARNING:** Radio silence **must** be maintained from the arming of the charges until they are run to a depth of 300 ft (100 m) and, on pulling out of the hole, from a depth of 300 ft (100 m) until the charges are safe (verified as discharged or disarmed).<br>! **WARNING:** Electric welding machines, cathodic protection, rig top-drive systems and other devices that can produce induced voltages or stray currents **must** be isolated.<br>Hazard – Radio interference resulting in electrically fired explosive inadvertently discharging |
| Q1 | Coating operations conducted concurrently with rig skids on an offshore installation, or within 82 ft (25 m) of an onshore rig, are *restricted* and require a Level 1 approval.<br>Hazards – Vision, noise obstructions, flammable vapors with spark potential |
| Q2 | CSE is *prohibited* from being conducted concurrently with rig skids.<br>Hazards – Spark potential, potential gas release |
| Q3 | Critical lifts conducted concurrently with rig skid operations on an offshore installation, or within 82 ft (25 m) of an onshore drilling rig, are *restricted* and require a Level 1 approval.<br>Hazards – Congested or conflicted work areas or increase in supervisory oversight requirements |
| Q5 | Rig skid operations conducted over live wellheads when the fire protection system is inoperable are *restricted* and require Level 3 approval.<br>Hazards – Fire or explosion from impact on live wellhead |
| Q7 | Hydrocarbon source activity is *prohibited* from being conducted concurrently with rig skid operations within 85 ft (26 m).<br>Hazards – Spark potential, fire or explosion |

*Continued*

DocuSign Envelope ID: DBC83A32-C98A-4963-9E1E-44593247DA33



# SIMOPS Restrictions Tables, Continued

**SIMOPS Restrictions Tables**, continued

| Matrix | Requirement |
|---|---|
| Q8 | Pigging operations are *prohibited* from being conducted concurrently with rig skid operations within 85 ft (26 m).<br>Hazards – Spark potential, fire or explosion |
| Q10 | Derrick barge lifts are *prohibited* during rig skid operations.<br>Hazards – Interferences with rig skid or derrick barge operations |
| Q11 | Diving operations during rig skid operations are *restricted* and require Level 1 approval.<br>Hazards – Dropped object into water potential; if fire protection system inoperable with divers in the water, other SIMOPS apply |
| Q12 | ROV operations in close proximity of a fire pump intake conducted concurrently with rig skid operations are *restricted* and require a Level 1 approval.<br>Hazards – ROV could obstruct the intake of the fire pump or the fire pump is inoperable. Tools or other equipment falling and striking the ROV |
| Q14 | CTU operation is *prohibited* during rig skid operations.<br>Hazards – Spark potential, fire or explosion; equipment collision impacts |
| Q16 | Electrically fired explosives operations on the surface and within 300 ft (100 m) below wellhead and rig skid operations are *prohibited* from occurring concurrently.<br>Hazards – Radio interference resulting in electrically fired explosive inadvertently discharging |
| R1 | Coating operations conducted concurrently with well stimulation operations on an offshore installation, or within 82 ft (25 m) of onshore well stimulation operations, are *restricted* and require a Level 1 approval.<br>Abrasive blasting conducted concurrently with well stimulation operations on an offshore installation, or within 164 ft (50 m) of onshore well stimulation operations, requires a Level 1 approval.<br>Hazard – Spark potential in proximity to potential hydrocarbon presence |
| R2 | CSE activities conducted concurrently with well stimulation operations are *restricted* within 85 ft (26 m) and require a Level 2 approval.<br>Hazard – Uncontrolled release |
| R3 | Crane activities conducted concurrently with well stimulation operations within 85 ft (26 m) are *restricted* and require Level 1 approval.<br>Hazard – Hydrocarbon release |
| R4 | Unrelated engine-driven equipment and vehicles operated concurrently with well stimulation within 85 ft (26 m), are *restricted* and require a Level 1 approval.<br>Hazard – Spark potential, impact to well stimulation operations, hydrocarbon release |

*Continued*

DocuSign Envelope ID: DBC83A32-C98A-4963-9E1E-44593247DA33



# SIMOPS Restrictions Tables, Continued

**SIMOPS Restrictions Tables**, continued

| Matrix | Requirement |
|---|---|
| R5 | Well stimulation operations when the fire protection system is inoperable, are *restricted* and require Level 3 approval.<br>Hazards – Hydrocarbon, well control potential issues—fire or explosion |
| R6 | Hot work outside designated hot work area, conducted concurrently with well stimulation operations within 85 feet (26 m), is *restricted* and requires a Level 1 approval.<br>Hazards – Hydrocarbon release—fire or explosion |
| R10 | Derrick barge lifts are *prohibited* from being performed concurrently with well stimulation operations.<br>Hazards – Interfaces between the two operations and potential interference from derrick barge boom, impact to risers, well control, hydrocarbon release, and fire or explosion |
| R11 | Diving operations with the fire pumps inoperable are *prohibited* from being conducted concurrently with well stimulation operations.<br>Hazard – Inoperable fire protection system |
| R12 | ROV operations in close proximity of a fire pump intake conducted concurrently with well stimulation operations are *restricted* and require Level 1 approval.<br>Hazards – ROV could obstruct the intake of the fire pump. If fire pump and protection system is inoperable, other SIMOPS apply (R11 – prohibited). Tools or other equipment falling and striking the ROV. |
| R13 | Tree-removed blowout preventer (BOP) stack movement conducted concurrently with well stimulation operations is *restricted* and requires a Level 2 approval.<br>Hazard – Hydrocarbon release—fire or explosion |
| R14 | Unrelated CTU operations conducted concurrently with well stimulation operations are *restricted* and require a Level 1 approval.<br>Hazard – Interfaces between the operations (such as, pumping, pressures) |
| R15 | Unrelated drilling or workover operations conducted during well stimulation operations are *restricted* and require a Level 2 approval.<br>Hazards – Congested work area, equipment spacing, dropped objects, well under pressure, hydrocarbon release potential |
| R16 | Electrically fired explosives operations conducted concurrently with unrelated well stimulation operations are *restricted* and require a Level 2 approval.<br>Hazards – Radio interference resulting in electrically fired explosive inadvertently discharging; potential gas release |

*Continued*

DocuSign Envelope ID: DBC83A32-C98A-4963-9E1E-44593247DA33



# SIMOPS Restrictions Tables, Continued

**SIMOPS Restrictions Tables**, continued

| Matrix | Requirement |
|---|---|
| R17 | Rig skidding conducted concurrently with well stimulation operations is *restricted* and requires Level 1 approval.<br>Hazards – Spark potential with flammable vapor potential, congested work area, and equipment spacing issues |
| S1 | Abrasive blasting conducted concurrently with wireline operations (with lubricator) within 85 ft (26 m) of a well site, is *restricted* and requires a Level 1 approval.<br>Hazard – Spark potential with potential for hydrocarbons |
| S2 | CSE activities conducted concurrently with wireline operations are *restricted* within 85 ft (26 m) and require Level 1 approval.<br>Hazards – Potential hydrocarbon release, fire or explosion |
| S3 | Crane activities conducted that are simultaneous with wireline operations are *restricted* and require Level 1 approval. This does not include the use of a crane to support the wireline operation and within the work scope.<br>Hazards – Impact to the wireline or lubricator by crane or crane load, dropped object impact |
| S4 | Unassociated engine-driven equipment and vehicles operated concurrently with wireline operations within 85 ft (26 m), are *restricted* and require a Level 1 approval.<br>Hazards – Impact to workover equipment, explosion hazard with vapor release<br>Note: Unassociated engine driven equipment should be equipped *with* intrinsically safe components if within *designated hazardous areas*. |
| S5 | Wireline operations conducted on a manned offshore facility when the fire protection system is inoperable are *prohibited*.<br>Hazards – Gas release and potential fire or explosion |
| S6 | Hot work outside the designated safe hot work area conducted concurrently with offshore wireline operations within 85 ft (26 m) is *restricted* and requires a Level 2 approval.<br>Hot work conducted concurrently with wireline operations within 85 ft (26 m) on a single well site onshore is *restricted* and requires a Level 1 approval.<br>Hazards – Gas release and potential fire or explosion |
| S7 | Hydrocarbon source activity conducted concurrently with wireline operations within 85 ft (26 m) is *restricted* and requires a Level 1 approval.<br>Hazards – Hydrocarbon release and engine-driven equipment |

*Continued*

DocuSign Envelope ID: DBC83A32-C98A-4963-9E1E-44593247DA33



# SIMOPS Restrictions Tables, Continued

**SIMOPS Restrictions Tables**, continued

| Matrix | Requirement |
|---|---|
| S8 | Pigging operations conducted concurrently with wireline operations within 85 ft (26 m) are *restricted* and require Level 1 approval.<br>Hazard – Hydrocarbon release |
| S10 | Unassociated derrick barge operations are *restricted* in the vicinity of a producing platform during wireline operations and require Level 2 approval.<br>Hazards – Potential interference and impact from derrick barge boom with wireline operations. Potential well control, hydrocarbon release, fire or explosion.<br>Note: Include Risk Assessment (RA) considerations for large lift boat or higher risk scenarios. |
| S11 | Diving operations with the fire protection system inoperable are *prohibited* from being conducted concurrently with wireline operations.<br>Hazard – Inoperable fire protection system (such as, disabled fire water pumps due to divers in the water) |
| S12 | ROV operations in close proximity of a fire pump intake conducted concurrently with wireline operations are *restricted* and require Level 1 approval.<br>Hazard – ROV could obstruct the intake of the fire pump or the fire pump is inoperable. |
| S13 | BOP movement conducted concurrently with wireline operations is *restricted* and requires a Level 1 approval.<br>Hazards – Lift impacts resulting in hydrocarbon release—fire or explosion |
| S14 | Unrelated CTU operations conducted concurrently with wireline operations are *restricted* and require Level 1 approval.<br>Hazard – Interfaces or impact between the two operations (such as, pumping, pressures) |
| S15 | Unrelated drilling or workover operations conducted during wireline operations are *restricted* and require a Level 1 approval.<br>Hazards – Interfaces or impact between the two operations, congested equipment spacing, dropped objects, well under pressure, hydrocarbon release |
| S16 | Electrically fired explosives operations conducted concurrently with unrelated wireline operations are *restricted* and require a Level 2 approval.<br>Hazards – Radio interference resulting in electrically fired explosive inadvertently discharging. Potential gas release from interfacing operations. |

*Continued*

DocuSign Envelope ID: DBC83A32-C98A-4963-9E1E-44593247DA33



# SIMOPS Restrictions Tables, Continued

**SIMOPS Restrictions Tables**, continued

| Matrix | Requirement |
|---|---|
| S17 | Rig skidding conducted concurrently with wireline operations is *restricted* and requires Level 1 approval.<br>Hazards – Spark potential, gas release, fire or explosion, congested equipment spacing |
| S18 | Well stimulation operations conducted concurrently with unrelated wireline operations are *restricted* and require Level 1 approval.<br>Hazards – Interfaces or impact between the two operations, congested equipment spacing, and hydrocarbon release with potential fire or explosion |

DocuSign Envelope ID: DBC83A32-C98A-4963-9E1E-44593247DA33



## 6.2 Routine SIMOPS Job Planning

**Introduction**

This section describes the guidelines for the planning and preparation of routine SIMOPS.

**SIMOPS planning activities**

The Site PIC for the SIMOPS **must**:

- Identify the restrictions and conditions under which the SIMOPS can be performed.
- Coordinate the planned activities with other line supervisors.
- Agree on communication lines with other line supervisors.
- Apply for any required Work Permits and Isolation Certificates (ICs) as required by the nature of the individual tasks.
- Plan and execute a Task Hazard Assessment (THA) and Job Safety Analysis (JSA).
- Conduct a safety discussion and briefing with the involved groups prior to commencement of the SIMOPS.
- Confirm that necessary documentation for the operation is prepared and available.

**Deviation request approval**

Follow these steps to initiate a deviation request from the activity restrictions and obtain appropriate approval to carry out SIMOPS.

Table 6-4 Deviation Request

| Task | Activity |
|---|---|
| 1. | Obtain a copy of the SIMOPS Deviation Request and Approval Form.<br>**Reference:** Section 6, "Tools" for the SIMOPS Deviation Request and Approval Form |
| 2. | Complete the form and include pertinent information. Attach any proposed procedures and THA performed. |
| 3. | Submit the SIMOPS Deviation Request and Approval Form for approval at the appropriate level (1, 2, or 3). |
| 4. | A copy of the *approved* SIMOPS Deviation Request and Approval Form should be returned to the originator and kept per unit's Management and Protection of Information (MPI) guidelines. |

DocuSign Envelope ID: DBC83A32-C98A-4963-9E1E-44593247DA33



# 6.3 Nonroutine SIMOPS Job Planning

**Introduction**

This section provides guidelines for planning and preparation for nonroutine simultaneous operations.

**Responsibility for planning**

The Operations Superintendent (Drilling or Workover Superintendent for drilling or workover operations) has the overall responsibility and accountability for planning and approving the SIMOPS plan. The Operations Superintendent appoints the supervisor responsible for planning SIMOPS.

The Responsible Supervisor should be appointed early enough to allow him or her the necessary time for preparing and planning the nonroutine SIMOPS.

The Operations Manager (if drilling is involved) may be responsible for evaluating and approving nonroutine simultaneous operations.

**Planning process flowchart**

The following figure shows the planning process for nonroutine SIMOPS.

Figure 6-3 Planning Process for Nonroutine SIMOPS

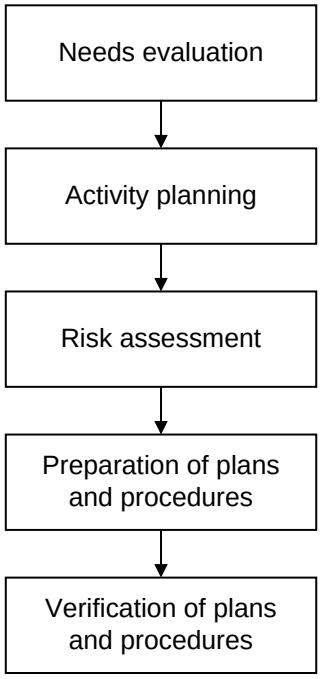


*Continued*

DocuSign Envelope ID: DBC83A32-C98A-4963-9E1E-44593247DA33



## Nonroutine SIMOPS Job Planning, Continued

**Evaluation of needs**

Evaluation of nonroutine SIMOPS includes:

- Providing an overview of the:
  - Background for performing the planned operation
  - Purpose of the planned operation
- Identifying the following:
  - Other activities planned during the same period that may introduce a higher risk
  - Other limitations or restrictions that may be imposed on the planned operations
  - Circumstances (for example, weather) that may affect planned operations

**Activity planning**

The activity planning phase should address the following:

- Description of the operation, work to be performed and timing aspects
- Identification of additional supervision and technical support required during the operation, including coordinating responsibility and allocating responsibilities
- Safety, health, environmental, security, and regulatory requirements
- Risk Assessment of the planned operation
- Description of requirements for equipment, tools, materials, communication, and safety equipment to be used
- Interfaces with other operations including commercial aspects
- Requirements, if any, for specific qualifications and training of personnel involved and identification of any extra personnel
- Emergency preparedness measures and alternative plans
- Requirement for work permits and Isolation Certificates including the signature or countersignature of an Area Interface Authority (AIA)

**References:**

- Section 3, "Permit To Work"
- Section 4, "Equipment Isolation and Reinstatement (Lock-out/Tag-out)"

*Continued*

DocuSign Envelope ID: DBC83A32-C98A-4963-9E1E-44593247DA33



## Nonroutine SIMOPS Job Planning, Continued

**SIMOPS keyword tool**

The following SIMOPS keyword tool may be used for creating nonroutine SIMOPS procedures.

Table 6-5 SIMOPS Keyword Tool

| Risks and Hazards | Causal Factors | Consequence Drivers |
|---|---|---|
| ▪ Fire or explosion<br>▪ Hydrocarbon release<br>▪ Impact risk:<br>– Dropped or swinging loads or tools<br>– Collision<br>▪ Rotating equipment<br>▪ Wires or cables snapping<br>▪ Entanglement<br>▪ Structural failure<br>▪ Ballast failure<br>▪ Loss of heading control; reduced power for heading control<br>▪ Man overboard<br>▪ Personnel exposure to air or water intakes, outlets, vents and so forth<br>▪ Working environment threats:<br>– Dust<br>– Chemical exposure<br>– Noise<br>– Gases and fumes<br>– Migration of sparks or chemicals into adjacent areas, including above and below | ▪ Safety systems affected<br>▪ Safety barriers impaired<br>▪ Monitoring, control, or detection systems affected<br>▪ Overload of utility or safety systems<br>▪ Distraction of personnel<br>▪ Overburdening personnel<br>▪ Key personnel tied up<br>▪ Wrong timing or coordination<br>▪ Communication or information disturbed<br>▪ Work environment affected<br>▪ Not covered by procedure<br>▪ Availability of emergency response or rescue resources (personnel and equipment) | ▪ Ignition source<br>▪ Potential hydrocarbon releases<br>▪ Effect on personnel, environment or equipment<br>▪ Effect on escape ways<br>▪ Effect on evacuation means<br>▪ Effect on safety systems (emergency shutdown [ESD], fire water, fire, and gas)<br>▪ More personnel present in area<br>▪ Personnel working in exposed positions<br>▪ Critical equipment in exposed position |

DocuSign Envelope ID: DBC83A32-C98A-4963-9E1E-44593247DA33



## 6.3.1 Job Execution

**Introduction**

This section describes guidelines for the execution of nonroutine simultaneous operations, including prestart verification and preparation for execution.

**Preparation activities**

Prior to starting the nonroutine SIMOPS, the Site Person in Charge (PIC) **must**:

- Conduct a Task Hazard Assessment (THA) and a Job Safety Analysis (JSA).
  **Reference:** Section 2.1.2, "Pre-Job Safety Planning"
- Hold a safety discussion and briefing.
- Familiarize the personnel involved in the operation with the tasks to be performed and with the communication lines. Confirm that tasks are understood.
- Communicate any safety and emergency measures to the personnel involved in the operation.

**SIMOPS safety discussion and briefing**

The Site PIC for the operation may call for a safety discussion prior to starting the SIMOPS operation.

The SIMOPS safety discussion should be conducted in accordance with the following requirements:

- The safety discussion is arranged in advance of the start-up of operations to allow sufficient time for personnel to become familiar with procedures and to carry out any remedial actions if required.
- Involved personnel attend the SIMOPS safety discussion, and discuss the following items:
  - Scope, purpose, and objectives
  - Review of operational details
  - Procedures and instructions
  - Emergency preparedness and contingency plans
  - Utilization of safety equipment and protective clothing
  - Hazardous chemicals
  - Individual responsibilities
  - Management of the operations
  - Communication lines
  - Any other item important for the operation

DocuSign Envelope ID: DBC83A32-C98A-4963-9E1E-44593247DA33



# 6.4 Tools

**SIMOPS documents**

The following SIMOPS documents used in conjunction with this section:

6.4.1 SIMOPS Decision Matrix

6.4.2 SIMOPS Deviation Request and Approval Form

## Simultaneous Operations Decision Matrix

- Normal producing operations assumed -

**NOTE! Well Control Operations is non-routine SIMOPS**

**This Matrix must be used in conjunction with the SIMOPS Restriction Tables**

| | | | Coating Operations | Confined Space Entry | Crane Activities | Engine-Driven Equipment/Vehicles | Fire Protection System Inoperable | Hot Work | Hydrocarbon Source Activity | Pigging Operations | Boat Operations | Derrick Barge | Diving Operations | ROV Operations | BOP Movement | Coiled Tubing Unit | Drilling or Workover | Electrical Fired Explosives Operations | Rig Skid | Well Stimulation | Wireline Operations |
|---|---|---|---|---|---|---|---|---|---|---|---|---|---|---|---|---|---|---|---|---|---|
| | | | 1 | 2 | 3 | 4 | 5 | 6 | 7 | 8 | 9 | 10 | 11 | 12 | 13 | 14 | 15 | 16 | 17 | 18 | 19 |
| Operations | Coating Operations | A | | R | R | R | R | R | R | R | R | R | R | R | R | SIMOPS Restricted | | | | | |
| | Confined Space Entry | B | R | | R | R | R | R | R | R | R | R | R | R | P | SIMOPS Prohibited | | | | | |
| | Crane Activities | C | R | R | | R | R | R | R | R | R | R | R | R | A | SIMOPS | | | | | |
| | Engine-Driven Equipment and Vehicles | D | R | R | A | | R | R | R | R | R | R | R | R | X | N/A | | | | | |
| | Fire Protection System Inoperable | E | R | R | R | R | | R | R | R | R | R | R | R | | | | | | | |
| | Hot Work | F | R | R | R | A | P | | R | R | R | R | R | R | | | | | | | |
| | Hydrocarbon Source Activity | G | R | R | R | R | R | R | | R | R | R | R | R | | | | | | | |
| | Pigging Operations | H | R | R | R | R | R | R | A | | R | R | R | R | | | | | | | |
| Marine | Boat Operations | I | A | A | A | A | R | A | A | A | | R | R | R | | | | | | | |
| | Derrick Barge | J | R | A | R | A | R | A | R | R | A | | R | R | | | | | | | |
| | Diving Operations | K | R | R | P | R | R | R | R | R | R | R | | R | | | | | | | |
| | ROV Operations | L | A | R | R | A | A | A | A | A | A | R | R | | | | | | | | |
| WellWork | BOP Movement | M | R | R | R | R | R | R | A | A | A | R | R | R | | | | | | | |
| | Coiled Tubing Unit | N | R | R | R | R | R | R | R | R | A | P | R | R | R | | | | | | |
| | Drilling or Workover | O | R | R | R | R | R | R | R | R | A | R | R | R | X | A | | | | | |
| | Electrically Fired Explosives Operations | P | R | P | P | R | P | P | P | P | P | P | P | P | P | P | R | | | | |
| | Rig Skid | Q | R | P | R | A | R | A | P | P | A | P | R | R | X | P | X | P | | | |
| | Well Stimulation | R | R | R | R | R | R | R | A | A | A | P | P | R | R | R | R | R | R | | |
| | Wireline Operations | S | R | R | R | R | P | R | R | R | A | R | P | R | R | R | R | R | R | R | |
| | | | 1 | 2 | 3 | 4 | 5 | 6 | 7 | 8 | 9 | 10 | 11 | 12 | 13 | 14 | 15 | 16 | 17 | 18 | |

DocuSign Envelope ID: DBC83A32-C98A-4963-9E1E-44593247DA33

ExxonMobil

# SIMOPS Deviation Request and Approval Form

| Date: | Originator: | Facility: |
|---|---|---|
| Work Permit Number(s): | Site PIC: | Location: |
| Duration of Deviation: | From (Day/Month/Year): | To (Day/Month/Year): |

| Description of SIMOPS Activities: | SIMOPS Matrix Segment: |
|---|---|
| | |
| | |
| | |

| Description of Deviaton: |
|---|
| |
| |
| |

| Reason/Rationale for Deviation: |
|---|
| |
| |
| |

| Precautions Taken: |
|---|
| |
| |
| |

| Deviation Approval Level Required (see restriction tables) | Level 1 ☐ | Level 2 ☐ | Level 3 ☐ |
|---|---|---|---|

| Level 1 - PIC: | Approved: Yes ☐ No ☐ | Sign: | Date: |
|---|---|---|---|
| Comments: | | | |
| | | | |
| | | | |

| Level 2 - Operations Superintedent: | Approved: Yes ☐ No ☐ | Sign: | Date: |
|---|---|---|---|
| Comments: | | | |
| | | | |
| | | | |

| Level 3 - Operations Manager: | Approved: Yes ☐ No ☐ | Sign: | Date: |
|---|---|---|---|
| Comments: | | | |
| | | | |
| | | | |

DocuSign Envelope ID: DBC83A32-C98A-4963-9E1E-44593247DA33



# Glossary

**Terms, abbreviations, and acronyms**

The following terms, abbreviations, and acronyms are used throughout this document.

| Term | Description |
|---|---|
| AA | Area Authority |
| AAF | Area Authority Functional |
| AGT | Authorized Gas Tester |
| AIA | Area Interface Authority |
| ALARP | as low as reasonably practicable |
| AO | Area Operator |
| API | American Petroleum Institute |
| AS | Australian Standard |
| BA | breathing apparatus |
| barg | bar gauge (pressure) |
| BOP | blowout preventer |
| °C | degrees Celsius |
| CAS | Competency Assurance System |
| CCP | central control point |
| CCR | Central Control Room |
| CIMS | Controls Integrity Management System |
| CO | carbon monoxide |
| $CO_2$ | carbon dioxide |
| COP | code of practice |
| COP | critical operating parameter |
| CPR | cardiopulmonary resuscitation |
| CSC | car sealed closed |
| CSE | confined space entry |
| CSO | car sealed open |
| CTU | coiled tubing unit |

*Continued*

DocuSign Envelope ID: DBC83A32-C98A-4963-9E1E-44593247DA33



# Glossary, Continued

**Terms, abbreviations, and acronyms**, continued

| Term | Description |
|---|---|
| CWP | critical work permit |
| DBB | double block and bleed |
| DBV | double block valve |
| DCS | distributed control system |
| DEMOB | demobilization |
| DWCM | Daily Work Coordination Meeting |
| EM | ExxonMobil |
| EMPC | ExxonMobil Production Company |
| ePTWS | electronic Permit to Work System |
| ESD | emergency shutdown |
| °F | degrees Fahrenheit |
| FeS | iron sulfide |
| FIMS | Facilities Integrity Management System |
| FPSO | floating production, storage, and offloading (vessel) |
| ft | feet |
| GREF | Global Real Estate and Facilities |
| HAZOP | Hazard and Operability Review |
| HC | hydrocarbon |
| $H_2S$ | hydrogen sulfide |
| IA | Isolating Authority |
| IC | Integrity Critical |
| IC | Isolation Certificate |
| ICC | Isolation Control Certificate |
| ICP | Integrity Critical Procedure |
| ICP | isolation control point |
| ID | identification |
| IDLH | immediately dangerous to life and health |
| JSA | Job Safety Analysis |
| kg | kilogram |

*Continued*

DocuSign Envelope ID: DBC83A32-C98A-4963-9E1E-44593247DA33



# Glossary, Continued

**Terms, abbreviations, and acronyms**, continued

| Term | Description |
|---|---|
| kPa | kilopascal |
| LAN | local area network |
| lb | pound |
| LC | locked closed |
| LEL | lower explosive limit |
| LMRA | last minute risk assessment |
| LNG | liquefied natural gas |
| LO | locked open |
| LO/TO | lock-out/tag-out |
| LPG | liquefied petroleum gas |
| LSA | low specific activity |
| LSHH | level shutdown high-high |
| LSLL | level shutdown low-low |
| LTI | long term isolation |
| m | meter |
| $m^3$ | cubic meter |
| MAWP | maximum allowable working pressure |
| MDMT | minimum design metal temperature |
| mg | milligram |
| MIRU | move in and rig up |
| MOB | mobilization |
| MOC | management of change |
| MODU | mobile offshore drilling unit |
| MOH | Medical and Occupational Health |
| MOV | motor operated valve |
| MPI | Management and Protection of Information |

*Continued*

DocuSign Envelope ID: DBC83A32-C98A-4963-9E1E-44593247DA33



# Glossary, Continued

**Terms, abbreviations, and acronyms**, continued

| Term | Description |
|---|---|
| $N_2$ | nitrogen |
| NC | normally closed |
| NIOSH | National Institute for Occupational Safety and Health (USA) |
| NO | normally open |
| NOHSC | National Occupational Health and Safety Commission (Australia) |
| NORM | naturally occurring radioactive material(s) |
| $O_2$ | oxygen |
| OBO | operated by others |
| OIM | Offshore Installation Manager |
| OIMS | Operations Integrity Management System |
| OS | Operations Support |
| P&ID | piping and instrumentation diagram |
| PA | public address |
| PBP | Production Best Practices |
| PEL | permissible exposure limit |
| PFD | process flow diagram |
| PH | Permit Holder |
| PIC | Person in Charge |
| PLC | programmable logic controller |
| PM | preventive maintenance |
| PPD | Permit Pack Document |
| PPE | personal protective equipment |
| ppm | parts per million |
| PSHH | pressure switch high-high |
| psi | pounds per square inch |
| psig | pounds per square inch gauge (gauge pressure) |

*Continued*

DocuSign Envelope ID: DBC83A32-C98A-4963-9E1E-44593247DA33



# Glossary, Continued

**Terms, abbreviations, and acronyms**, continued

| Term | Description |
|---|---|
| PSLL | pressure switch low-low |
| PSV | pressure safety valve |
| PTW | permit to work |
| PTWS | Permit to Work System |
| PU | Production Unit |
| RA | risk assessment |
| RAD | radiation |
| RAMS | Risk Assessment and Management System |
| RFIC | Remote Field Isolation Certificate |
| RFO | Remote Field Operations |
| ROV | remotely operated vehicle or valves |
| SBV | single block valve |
| SCBA | self-contained breathing apparatus |
| SCC | Supplementary Control Certificate |
| SCSSV | surface-controlled subsurface safety valve |
| SDS | Safety Data Sheet |
| SHE | safety, health, and environment |
| SHES | safety, health, environment, and security |
| SIMOPS | simultaneous operations |
| SME | subject matter expert |
| $SO_2$ | sulfur dioxide |
| SSV | surface safety valve |
| STEL | short term exposure limit |
| STOP | safety training observation program |
| STT | sanction to test |
| SWP | Safe Work Practice |
| TCP | tubing conveyed perforating |
| TD | Temporary Defeat |
| TEMPSC | totally enclosed motor propelled survival craft |

*Continued*

DocuSign Envelope ID: DBC83A32-C98A-4963-9E1E-44593247DA33



# Glossary, Continued

**Terms, abbreviations, and acronyms**, continued

| Term | Description |
|---|---|
| THA | Task Hazard Assessment |
| THC | total hydrocarbon content |
| TWA | time weighted average |
| UEL | upper explosive limit |
| UPS | uninterruptible power supply |
| VP | Vice President |
| WAH | work at heights |
| WBRM | wellbore risk management |
| WMS | Work Management System |

DocuSign Envelope ID: DBC83A32-C98A-4963-9E1E-44593247DA33



# Index


## A

**abrasive blasting**
- Critical Work Permit, 3-49
- gas testing precautions, 5-5
- simultaneous operations
  - coating activities, 6-6
  - definition, 6-6

**acceptance testing, 4-113**
**air freeing (*see under* reinstatement)**
**Area Authority (AA)**
- confined space entry, 3-35, 3-47
- hot work
  - radio silence, 3-33
- isolation and reinstatement
  - acceptance testing, 4-113
  - blinds, approval of, 4-62
  - energy isolations, removing, 4-111–4-113
  - incidents, emergency teams, 4-9
  - Isolation Certificate, 4-42, 4-90, 4-111–4-113
  - retesting, 4-20
  - temporary defeats, approval of, 4-14, 4-15, 4-19
- isolation points
  - locks, applying and removing, 4-48
- JSA Reviewer, 2-13
- work permits, 2-19–2-25
  - confirms prerequisites, 3-7
  - extending duration of, 3-20
  - isolations, 3-18
  - Permit Holder can fulfill role of Area Authority and Area Operator, 3-5
  - review of, 3-17
  - temporary defeats, 3-18

**Area Interface Authority (AIA)**
- work permits
  - physical interfaces, 3-13

**Area Operator (AO)**
- acceptance testing, 4-113
- air-freeing, 4-106
- AreaOperator_WorkPermitProc, 3-18
- confined space entry, 3-44
- gas testing, 3-19
- isolations
  - blinding, 4-61, 4-64, 4-65
  - breaking containment, 4-56
  - de-isolations, 4-111
  - Draining and Depressurizing, 4-51
  - electrical isolation, 4-47
  - energy isolation, 4-39
  - energy isolation removal, 4-111–4-112
  - Isolation Certificate closeout, 4-111
  - isolation points, multiple, 4-46
  - lock-outs, 4-31
  - valve security, operator actions, 4-33
- lock-outs, 4-28
- reinstatement
  - air freeing, 4-106
  - equipment testing, 4-90
  - Isolation Certificate, 4-111–4-112
  - recommissioning, 4-88
- Sanction to Test, 4-90
- work group cooperation, 3-4
- work permits, 2-19, 2-21, 2-23
  - approval, 3-7
  - isolations and temporary defeats, 3-18
  - Permit Holder can fulfill role of Area Authority and Area Operator, 3-5

**Atmospheric Test Record**
- confined space entry, 3-41–3-43
- form, 3-56
- work permits, 5-1

**atmospheric testing**
- confined space entry, 3-41–3-43

**Authorized Gas Tester (AGT)**
- hot work requirements, 3-32
- tests required to be performed by AGT, 5-4

## B

**blinding**
- isolations (*see under* isolations)
- removing blinds and spades (*see under* reinstatement, recommissioning)

**Boat Operations (SIMOPS definition), 6-6**
**BOP stack (SIMOPS definitions)**
- definition and movement, 6-6
- tree-on and tree-removed, 6-11

**breaking containment (*see under* isolations)**
**bunding and containment**
- isolation integrity tests, 4-32
- safety precautions
  - draining and depressurizing, 4-54
  - hydroblasting equipment, 4-82
  - hydrocarbon freeing, 4-70

## C

**casing pressure (*see* Critical Casing Pressure)**

DocuSign Envelope ID: DBC83A32-C98A-4963-9E1E-44593247DA33



**Central Control Point (CCP), 3-6**
**changes**
in work scope, 3-6, 3-9
**checklists (*see also* forms)**
SIMOPS Matrix, 6-13
**Coating Operations (SIMOPS definition), 6-6**
**Confined Space Entrant**
entry and exit recording, 3-45
**confined space entry (CSE), 3-34–3-47**
atmospheric testing, 3-41–3-43, 5-4
CSE class determination, 3-36–3-37
definition, 3-34
examples, 3-35
gas testing requirements, 5-7
gas testing, continuous, 5-4
hazards and consequences, 3-38–3-39, 3-46
hazards, assessing, 3-36
Isolation Control Certificate, 4-43
job closeout, 3-47
job planning, 3-40
Job Safety Analysis (JSA), 3-40, 3-42
permit
description, 3-35
form, 3-56
Permit Pack, 3-41
positive isolation, 4-21, 4-26
precautions, 3-39–3-47
atmospheric testing, 3-41–3-43
communications, 3-44
lighting, 3-43
naturally occurring radioactive material (NORM), 3-46
personal protective equipment (PPE), 3-41
Standby Person, 3-44
ventilation, 3-43
warning signs, 3-46
recording entry and exit, 3-45
requirements
gas testing, 5-7
hydroblasting, 4-82
hydrocarbon vents, 4-44
inert gas, purging, 4-76
Isolation Control Certificate, 4-43
positive isolation, 4-26
vessels, acceptable temperature, 4-79
vessels, steaming, 4-77–4-78
rescue provisions, 3-45
risk mitigation, 3-39
simultaneous operations (SIMOPS)
SIMOPS activity, 6-5
SIMOPS Matrix, 6-13
Standby Person, 3-39, 3-44, 5-7
(*see also* Confined Space Entry Attendant)
total hydrocarbon content (THC), 3-36–3-37
training, 3-47
**Confined Space Entry Attendant**
Confined Space Entry Permit, must sign, 3-41
Standby Person, 3-39
gas testing, 5-7
responsibilities, 3-44
training, 3-47
**Confined Space Entry Permit**
description, 3-35
form, 3-56
**Confined Space Entry Supervisor**
appointment, 3-40
**Crane Activities (SIMOPS definition), 6-6**
**crane and lifting work**
simultaneous operations
crane activities, 6-5, 6-6
heavy lift, 6-8
**Critical Casing Pressure (SIMOPS definition), 6-6**
**critical devices and systems (*see* temporary defeats)**
**Critical Work Permit, 3-48–3-53**
breaking containment, 4-51
blinding, 4-60
depressurization, 4-51
hydrocarbon freeing, 4-69
form, 3-56
spark potential
example activities, 3-53
permit withdrawal, purging with hydrocarbons, 4-109

## D

**de-isolations**
Isolation Certificate, 4-42, 4-111
precautions, 4-112
sequence to de-isolate, 4-110
**diving operations**
Critical Work Permit, 3-50
simultaneous operations
activity, 6-5
SIMOPS Matrix, 6-13
**double block and bleed isolation (*see* valves)**
**double block valve isolation (*see* valves)**
**drilling (SIMOPS definition), 6-7**

## E

**electric work, higher-risk**
definition, 3-51
**energy isolations**

DocuSign Envelope ID: DBC83A32-C98A-4963-9E1E-44593247DA33



(*see* energy isolation and certificate *under* isolations)
(*see* removing energy isolations *under* reinstatement)
**Engine-Driven Equipment and Vehicles (SIMOPS definition), 6-7**
**equipment and tools**
engine-driven equipment
SIMOPS definition, 6-7
**equipment isolation and reinstatement (*see* isolation and reinstatement), 4-1**
**ESD (emergency shutdown) (SIMOPS definition), 6-7**

## F

**fire extinguishers**
requirements
Fire Watch location, 3-32
hot work, 3-25, 3-26
training, 3-33
**Fire Watch**
fire extinguishers, 3-32
hot work, 3-30
roles and responsibilities, 3-32
training, 3-33
**Firewater System Inoperable (SIMOPS definition), 6-7**
**flanges**
Joint Complete tape, 4-88
**forms**
(*see also* individual entries)
Atmospheric Test Record, 3-56
Confined Space Entry Permit, 3-56
Critical Work Permit, 3-56
General Work Permit, 3-56
Hot Work Permit, 3-56
Isolation Control Certificate, 4-114, 6-43
Temporary Defeat Certificate, 4-114, 6-43
Work Team Declaration (Supplement), 3-56

## G

**gas**
hazardous, depressurizing, 4-51
**gas purging (*see* inert gas purging)**
**gas testing, 5-1**
(*see also* Authorized Gas Tester)
confined space entry (CSE)
CSE class determination, 3-36–3-37
requirements, 5-7
gas detectors
electronic, procedures for, 5-10
tube-type, 5-12
gas properties
common gases, 5-8
gases, list of, 5-2
hazards, 5-5
hazards of improper testing, 5-5
hot work
gas monitoring, 3-32
gas testing, 5-5
initial gas test, 5-5
hydrogen sulfide ($H_2S$) (*see* main entry)
procedures, general, 5-6
activities requiring gas testing, 5-6
confined spaces, 5-7
delegation to Permit Holder, 5-9
factors influencing gas tests, 5-7
guidelines for gas tests, 5-8
hot work, 5-6
responsibilities, personnel
Permit Holder, 5-9
sulfur dioxide ($SO_2$) (*see* main entry)
**gas tests**
continuous gas testing, 5-4
requirements for, 5-4
responsibilities, personnel
Authorized Gas Tester, 5-4
types of, 5-2, 5-4
**General Work Permit, 3-54–3-55**
form, 3-56

## H

**hazardous chemicals**
precautions
blinding, for facility systems, 4-59
simultaneous operations
SIMOPS safety meeting, 6-42
**hazardous fumes and vapors, 3-28**
**hazardous gas, depressurizing, 4-51**
**high pressure jetting (hydroblasting), 4-82**
**higher-risk electric work**
definition, 3-51
**hot work**
blinding
plugs, inert gas flow, 4-66
SIMOPS procedures, 4-58, 4-62, 4-64, 4-88
consequences, 3-27
gas
initial test, 3-30, 5-6
monitoring, 3-30, 3-32
testing, 5-4, 5-5
hazards, 3-27
health hazards, 3-28–3-29

DocuSign Envelope ID: DBC83A32-C98A-4963-9E1E-44593247DA33




Hot Work Permit
activities and scope, 3-22
considerations, 3-25–3-26
designated hot work area, 3-25
Designated offshore workshop, 3-26
Designated onshore workshop, 3-25
form, 3-56
multiple permits, 3-26
outside of living quarters and workshops, 3-26
purging with hydrocarbons, permit withdrawal, 4-109
restrictions, 3-26
hydrocarbon sources, 3-23
isolations, equipment
blinding, inert gas flow, 4-66
hydrocarbon vents, 4-44
pipelines, nitrogen purge, 4-74
positive isolation recommended, 4-26
restrictions, 4-54
location, definition of, 3-23
mitigation, 3-27
pipelines
nitrogen purge, 4-74
precautions, 3-29–3-33
reinstating facilities and equipment
blinding, restrictions, 4-88
purging with hydrocarbons, 4-109
requirements
facilities, restrictions at, 4-54
risk management, 3-27
safety requirements, 3-24
simultaneous operations (SIMOPS)
safe welding area, definition, 6-6
SIMOPS activity, 6-5
SIMOPS Matrix, 6-13
undesignated safe welding area, 6-11
Standby Person, 3-26
welding
designated hot work area, 3-25
safe welding area, 6-6
undesignated safe welding area, 6-11

**Hot Work**
HotWork_All, 3-22

**Hot Work Permit**
(*see* hot work)

**hydroblasting, 4-82**

**hydrogen sulfide ($H_2S$)**
gas testing
portable detectors, 5-2
requirement for, 5-8
properties, 5-8

## I

**inert gas purging**
isolations, hydrocarbon freeing, 4-74–4-76
reinstatement, air freeing, 4-105

**interfaces, 2-15**
incidents, preventing, 3-3
informing of work plans, 2-21
managing with work permits, 3-11
organizational, 3-12
Permit to Work System, 3-3
physical, 3-13
shift, crew, and handover, 3-12
site management, 3-5

**internal combustion engines**
gas testing
carbon monoxide, 5-8

**iron sulfide**
confined space entry hazards, 3-38
precautions
warning to keep damp, 4-67, 4-70
sulfur dioxide ($SO_2$)
produced by iron sulfide, warning, 4-67

**Isolating Authority (IA)**
isolation and reinstatement
blinds, verifying, 4-21
Isolation Certificate, 4-90, 4-111
responsible for safety, 4-26
isolation plans, 3-18
roles and responsibilities
work permits, isolations and temporary defeats, 3-18

**isolation and reinstatement**
activities, list of, 4-4
gas testing (*see* gas testing ), 5-1
isolations (*see* isolations), 4-19–4-83
safety, 4-4–4-9
hazards, 4-6
personal protective equipment, 4-8
risk management, 4-5–4-7
Standby Person, 4-9
safety precautions
blind and spade removal, 4-88
blinding, 4-64–4-65
breaking containment, 4-44–4-45
de-isolating facility systems, 4-112
draining and depressurizing, 4-53–4-54
energy isolations, 4-44–4-45
general, 4-8–4-9
hydroblasting, 4-82
hydrocarbon freeing, 4-70
purging with hydrocarbons, 4-109
summary of the process, 4-3–4-4

DocuSign Envelope ID: DBC83A32-C98A-4963-9E1E-44593247DA33




temporary defeats (*see* temporary defeats), 4-10–4-19
**Isolation Certificate (IC)**
isolation tag, 4-28
work permits, cross-referenced on, 3-18
**Isolation Control Certificate (IC)**
form, 4-114, 6-43
**Isolation Control Certificate (ICC)**
requirements
valid period, 4-42
**isolation planning**
energy isolation, 4-40
**isolations, 4-19–4-83**
(*see also* isolation and reinstatement)
activities, list of, 4-35
Area Authority verifies, 3-18
blinding, 4-59–4-66
definitions, 4-59
permanent blinds, 4-66
planning, 4-60
plugs, 4-66
precautions, 4-64–4-65
priority, lines and valves, 4-63
requirements, before, 4-60
requirements, fabrication, 4-65
requirements, work permits, 4-62
spading, 4-59–4-66
boundary isolations, 4-43–4-44
breaking containment, 4-55–4-58
planning, 4-55–4-57
precautions, 4-58
cleaning
dead legs, 4-81
hydroblasting, 4-82
planning, 4-81
conflicting work restrictions, 4-35
dead legs, 4-81
de-isolations (*see* main entry), 4-112
draining and depressurizing
planning, 4-51–4-52
precautions, 4-53–4-54
energy isolation and certificate, 4-36–4-50
boundary isolations, 4-43–4-44
crew and shift changes, 4-48
energy sources, 4-41
flowchart, isolation process, 4-37
long-term isolations, 4-50
multiple isolation requests, 4-49
padlocks, 4-48
personal isolations, 4-45
planning isolations, 4-39–4-41
precautions for energy isolations, 4-44–4-45
electrical isolations, 4-47
procedure, general energy isolation, 4-38
process, multiple isolation points, 4-46
*see also* Isolation Certificate
executing the isolation plan, 4-40
hydrocarbon freeing
general flushing process, 4-72
hot water circulation process, 4-79
inert gas purging, 4-74–4-76
planning, 4-69
precautions, 4-70
purge by dilution process, 4-75
steaming process, 4-77
isolation tag, 4-28
methods, 4-21–4-25
barriers for actuated valves, 4-22
barriers for pressure, 4-21
double block and bleed isolation, 4-21, 4-23
double block valve isolation, 4-21, 4-24
Isolating Authority responsibilities, 4-21
isolation process, overview, 4-20
positive isolation, 4-21
process isolations, 4-21
single block valve isolation, 4-21, 4-25
planning and execution, 4-40
procedures (*under* isolations, *see* energy isolation and certificate, hydrocarbon freeing, integrity test)
standards, 4-26–4-32
integrity retesting, 4-20
isolation process, overview, 4-20
noncompliant isolations, 4-31
positive isolation, 4-26
process integrity tests, 4-31–4-32
security methods, acceptable, 4-26
integrity test,
double block and bleed, 4-31, 4-114
double block valve, 4-31, 4-114
single block valve, 4-31, 4-114
valves and valve security (*see* valves main entry)


## J


**Job procedure review, 2-18**
**Job Safety Analysis**
JSA_PermitPro, 3-17
**Job Safety Analysis (JSA), 2-10**
barriers, 4-8
blinding, 4-66
confined space entry
atmospheric testing, 3-42
job planning, 3-40
draining or venting, 3-49
expectations, minimum, 2-11

DocuSign Envelope ID: DBC83A32-C98A-4963-9E1E-44593247DA33




forms
Review & Hazard Management Form, 2-30
Review & Hazard Management Form, 2-30
JSA process
overview, 2-12
tasks details, 2-13–2-15
personal protective equipment (PPE), 4-8
review of, 2-18
risk mitigation
confined space entry, 3-39
hot work, 3-27
isolations and reinstating, 4-7
simultaneous operations, 6-38, 6-42
Task Hazard Assessment (THA)
confined space entry, 3-40
description, 2-9
form, 2-30
Permit Pack, required for, 2-19
simultaneous operations, 6-38, 6-42
work permit process, 3-17
tasks requiring a JSA, 2-11
toolbox meeting, 2-25
work permit process, 3-19
**job site inspection, 2-17**

## L

**laws, 1-9**
**Life Saving Action Pages**
Tools, 2-30
**Life Saving Actions, 2-3**
Applications, 2-4
Breaking Containment, 2-5
Confined Space Entry, 2-5
Critical Devices, 2-5
Critical Procedures, 2-6
Energy Isolations, 2-4
Hot Work, 2-5
Lifting and Hoisting, 2-6
Work Authorization, 2-4
Working at Heights, 2-5
**lock-out/tag-out**
handover process, personnel, 3-13
integrity test by Area Operator (AO), 4-31
Isolation Control Certificate number, 4-42
process, 4-29–4-31
removal, 4-28
**lower explosive limit (LEL)**
confined space entry class determination, 3-36

## M

**major and minor activities (SIMOPS definitions)**
major activity, 6-8
**MOB/DEMOB (SIMOPS definition), 6-8**

## N

**naturally occurring radioactive material (NORM)**
breaking containment, 3-49
cleaning hydrocarbon-containing equipment, 4-83
hazardous materials
confined space entry, 3-36–3-38
hot work, 3-25, 3-28
job site inspection, 2-18
low specific activity (LSA), 3-46
**nonrig wireline work (SIMOPS definition), 6-8**

## O

**Operation (SIMOPS definition), 6-8**

## P

**perforating (SIMOPS definition), 6-9**
**Permit Holder (PH)**
Confined Space Entry Supervisor, 3-40
gas testing, delegated to Permit Holder, 5-9
isolation and reinstatement
breaking containment, 4-56–4-57
changes to, 4-41
de-isolations, 4-111
energy isolation procedure, 4-39
Isolation Certificate, 4-111
isolation points
locks, applying and removing, 4-48–4-50, 4-111
multiple, locking process, 4-46
JSA review, toolbox meeting, 2-25
roles and responsibilities
safe work performance by Work Team, 3-4
work permits
PH prepares, 2-19
remote locations, Permit Holder can fulfill role of Area Authority and Area Operator, 2-21, 3-5
**Permit Pack**
confined space entry, 3-41
Critical Work Permit, 3-22, 3-48, 3-54
development of, 3-14
isolations
blinds, 4-62
electrical diagrams, 4-38
energy isolations, 2-19
P&IDs, 4-18, 4-38
Temporary Defeat Certificate, 4-16

DocuSign Envelope ID: DBC83A32-C98A-4963-9E1E-44593247DA33




temporary defeats, 2-19
Permit Pack Requirements Matrix, 2-19, 2-20, 2-30, 3-17
review
Area Authority and Area Operator, 2-21
daily work coordination meeting, 2-19
safety precautions, documenting, 2-15
simultaneous operations, 6-15
work interfaces, 2-15
**Permit Pack Requirements Matrix**
PermitPack_ProcAll, 3-17
**permit to work system (PTWS)**
work permit process
work without a permit, 3-11
**Permit to Work System (PTWS), 3-3–3-12**
de-isolations, 4-90
interfaces, 3-11
Isolation Certificates, 4-20
objectives, 3-3
principles, 3-4–3-5
Operations, 3-4
remote operations scalability, 3-5
Site Management, 3-5
Work Team, 3-4
purpose, 3-3
requirements, 3-6–3-9
planning and preparation, 3-7
valid period for work permits, 3-8
work permit approvals, 3-7
work permit closeout checks, 3-9
work permit suspension and withdrawal, 3-9
work permits, 3-6
simultaneous operations (SIMOPS), 6-1, 6-4
Temporary Defeat Certificates, 4-10
work permit process
flowchart, 3-15
task details, 3-16–3-21, 4-17
**Person In Charge (PIC)**
General Work Permits, 3-55
isolation and reinstatement
blinding, approval of, 4-59
temporary defeats, 4-14, 4-15
simultaneous operations (*see* Site PIC)
work permits
work scope changes, approval of, 3-5
**personal protective equipment (PPE)**
confined space entry, 3-41
isolation and reinstatement, 4-8
**pigging (SIMOPS definition), 6-9**
**pipelines**
nitrogen purge, 4-74, 4-76
**procedures**
(*see under* isolations)
**producing (SIMOPS definition), 6-9**
**pyrophoric scale (*see also* iron sulfide)**
precautions
warning to keep damp, 4-67, 4-70
sulfur dioxide ($SO_2$)
warning, 4-67


## R


**radio silence**
hot work, 3-33
simultaneous operations, 6-7, 6-10
Temporary Defeat Certificate required, 4-12
when not required, 3-53, 6-10
**recommissioning (*see under* reinstatement)**
**regulations, 1-9**
**reinstatement**
(*see also* isolation and reinstatement)
acceptance testing, 4-113
air freeing, 4-101–4-109
break tank requirement, 4-104
displacing with water, 4-104
inert gas purging, 4-105, 4-108
methods, 4-104
precautions, purging with hydrocarbons, 4-109
purging water or nitrogen with hydrocarbons, 4-109
water flushing, 4-107
conflicting work restrictions, 4-84
equipment testing, 4-89–4-90
planning, 4-89
procedure and IC requirements, 4-90
leak testing
process, 4-96–4-100
simultaneous, 4-94
testing with liquids, 4-93
overview, sequence of events, 4-84
recommissioning, 4-86–4-88, 4-86–4-88
blind and spade removal, precautions, 4-88
critical devices, 4-88
pressure introduction, 4-87
problem areas, 4-87
removing energy isolations, 4-110–4-112
planning, 4-110–4-111
precautions, de-isolating facility systems, 4-112
responsibilities, personnel
Area Operator (AO), 4-88, 4-90, 4-106, 4-111–4-112
Isolating Authority (IA), 4-90, 4-111
**remote operations scalability, 3-5**
**Rig Skid (SIMOPS definition), 6-10**
**roles and responsibilities**
Confined Space Entrant, 3-45

DocuSign Envelope ID: DBC83A32-C98A-4963-9E1E-44593247DA33




Confined Space Entry Supervisor, 3-40
**ROV (remotely operated vehicle)**
*see* ROV operations *under* diving operations
SIMOPS definition, 6-10

## S

**safety**
isolation and reinstatement (*see* safety *under* isolation and reinstatement)
safety device (SIMOPS definition), 6-10
**Sanction to Test (STT), 4-89–4-90**
**SCSSV (surface-controlled subsurface safety valve) (SIMOPS definition), 6-10**
**shift changes, 3-12**
**SIMOPS conflicts, 2-22**
**SIMOPS definitions**
(*see also* simultaneous operations)
nonroutine SIMOPS, 6-2
routine SIMOPS, 6-2
Site PIC, 6-2
terms in SIMOPS Matrix and SIMOPS Restrictions Tables, 6-6
abrasive blasting, 6-6
adjacent wells, 6-6
Boat Operations, 6-6
BOP stack, 6-6
BOP stack movement, 6-6
BOP stack, tree-on, 6-11
BOP stack. Tree-removed, 6-11
Coating Operations, 6-6
Critical Casing Pressure, 6-6
CTU (coiled tubing unit), 6-6
designated safe welding area, 6-6
drilling, 6-7
Engine-Driven Equipment and Vehicles, 6-7
ESD (emergency shutdown), 6-7
Firewater System Inoperable, 6-7
flowline, 6-8
Gemoco® unit, 6-8
major activity, 6-8
MIRU (move in and rig up), 6-8
MOB/DEMOB, 6-8
nonrig wireline work, 6-8
Operation, 6-8
paraffin cutter, 6-8
partial operating facility, 6-9
perforating, 6-9
pigging, 6-9
pipeline, 6-9
potential source of hydrocarbon leak, 6-9
producing, 6-9
prohibited, SIMOPS Matrix, 6-9
prohibited, SIMOPS Restrictions Tables, 6-9
PSHH (pressure switch high-high), 6-9
PSLL (pressure switch low-low), 6-9
quick-release fusible lock-out device, 6-10
Rig Skid, 6-10
rig-related, 6-10
ROV (remotely operated vehicle), 6-10
safety device, 6-10
SCSSV (surface-controlled subsurface safety valve), 6-10
shut-in, 6-10
snubbing, 6-11
SSV (surface safety valve), 6-10
station bill, site-specific, 6-10
subsea maintenance, 6-11
TCP (tubing conveyed perforating), 6-11
TIW valve, 6-11
undesignated welding area, 6-11
unprotected lubricators, 6-11
unprotected process equipment, 6-11
well control operations, 6-12
well control problem (drilling or workover), 6-12
well control problem (producing), 6-12
well stimulation, 6-12
Wellbore Risk Management (WBRM) Team, 6-12
workover, 6-12
**SIMOPS Matrix, 6-13, 6-16**
**simultaneous operations (SIMOPS), 6-1**
(*see also* SIMOPS definitions)
activities
allowed, definition, 6-14
list of, 6-5
more than two, 6-18
prohibited, definition, 6-9, 6-14
restricted, definition, 6-14
definitions
(*see also* SIMOPS definitions)
nonroutine SIMOPS, 6-2
routine SIMOPS, 6-2
Site PIC, 6-2
terms in SIMOPS Matrix and SIMOPS Restrictions Tables, 6-6
deviations, 6-19
authorizations required, 6-14
Levels 1, 2, and 3, 6-14
prohibited activities, 6-9
request procedure, 6-38
restricted activities, 6-14
Job Safety Analysis (JSA), 6-38, 6-42
nonroutine SIMOPS procedures
flowchart, planning nonroutine SIMOPS, 6-39

DocuSign Envelope ID: DBC83A32-C98A-4963-9E1E-44593247DA33




job execution, 6-42
job planning, 6-39
key words, table of, 6-41
Responsible Supervisor, appointment of, 6-39
work permits, 6-40
nonroutine SIMOPS, responsibilities
Operations Manager, 6-39
Operations Integrity Management System (OIMS)
System 6-4 Work Management, 6-2
precautions, Permit Pack:, 6-15
responsibilities, personnel
*see* nonroutine SIMOPS and Site PIC main entry
routine SIMOPS procedures
deviation request procedure, 6-38
job planning, 6-38
routine SIMOPS, responsibilities
Site PIC, 6-38
safety meeting, 6-42
SIMOPS Matrix, 6-13
classification of simultaneous activities flowchart, 6-17
definition, 6-13
matrix classes, 6-14
more than two simultaneous activities, 6-18
risk assessment considerations, 6-14
using the matrix, 6-15
SIMOPS process, 6-4
SIMOPS Restrictions Tables
deviations, 6-19
restrictions tables, 6-20
Task Hazard Assessment (THA), 6-38, 6-42
work permits, 6-40
**single block valve isolation (*see* valves)**
**Site PIC**
simultaneous operations (SIMOPS)
definition, 6-2
deviations, 6-14, 6-15
planning, 6-38
**snubbing (SIMOPS definition), 6-11**
**spade (*see* blinding *under* isolations)**
**spark potential work**
example activities, 3-53
permit withdrawal
purging with hydrocarbons, 4-109
**SSV (surface safety valve) (SIMOPS def.), 6-10**
**Standby Person**
*see* hot work, Confined Space Entry Attendant, simultaneous operations (SIMOPS)
**static electricity protection**
air-freeing
break tanks, 4-104
hoses, 4-104, 4-107
hazards, elimination of, requirement, 4-83
hydrocarbon freeing
hot water circulation process, 4-79
steaming process, 4-77
hydrocarbon-containing equipment
cleaning, 4-83
vessels, cleaning, 4-83
**sulfur dioxide ($SO_2$)**
hydrogen sulfide, burning produces $SO_2$, 5-8
iron sulfide, capable of producing $SO_2$ warning, 4-67
toxic, 5-2
**SWP Checklist review, 2-18**


## T


**Task Hazard Assessment (THA)**
*see under* Job Safety Analysis (JSA)
**Temporary Defeat Certificate**
definition and requirements, 4-16
form, 4-114, 6-43
work permits, cross-referenced on, 3-18
**temporary defeats, 4-10–4-19**
alternative controls, 4-13
Area Authority verifies, 3-18
critical devices, 4-11
critical systems, 4-12
definition, 4-11
long-term, 4-15
overview, 4-10–4-15
procedure, 4-16
process, 4-17
Temporary Defeat Certificate
definition and requirements, 4-16
form, 4-114, 6-43
**tests**
(*see also* isolations)
isolation integrity
double block and bleed, 4-114
double block valve, 4-114
single block valve, 4-114
**total hydrocarbon content (THC), 3-36–3-37**


## V


**valves**
barriers for actuated valves, 4-22
isolation integrity tests
double block and bleed, 4-31, 4-114
double block valve, 4-31, 4-114
single block valve, 4-31, 4-114
isolations
double block and bleed, 4-21, 4-23

DocuSign Envelope ID: DBC83A32-C98A-4963-9E1E-44593247DA33




double block valve, 4-21, 4-24
single block valve, 4-21, 4-25
surface safety valve (SSV), 6-10
surface-controlled subsurface safety valve (SCSSV), 6-10
valve security, 4-33–4-34
car sealed open (CSO), 4-33
normally closed (NC), 4-33
normally open (NO), 4-33


## W


**welding**
hot work, 3-22
pipelines, nitrogen purge, 4-76
safe welding area, SIMOPS
definition, 6-6
undesignated safe welding area, 6-11
**well control operations and problems (SIMOPS definition), 6-12**
**Well Stimulation (SIMOPS definition), 6-12**
**Wellbore Risk Management (WBRM) Team (SIMOPS definition), 6-12**
**wireline work, nonrig (SIMOPS definition), 6-8**
**work interfaces, 2-15**
(*see also* interfaces)
**Work Management System, 2-1–2-30**
(*see also* permit pack and work permits)
job closeout, 2-26
job execution, 2-25
pre-job safety planning, 2-8–2-18
purpose, 1-2
work flow process elements, 2-1–2-2
work group job preparation, 2-18–2-20
work permit process
flowchart, 3-15
task details, 3-16–3-21, 4-17
work planning, 2-3–2-8
work planning review and approval, 2-21–2-22
work site preparation and confirmation, 2-23
**Work Management System Assessment Forms, 2-30**
**work permits**
approval, 3-7
assessments, 2-29
description and use, 3-6
forms (*see also* forms, individual entries)
Atmospheric Test Record, 3-56
Confined Space Entry Permit, 3-56
Critical Work Permit, 3-56
General Work Permit, 3-56
Hot Work Permit, 3-56
Work Team Declaration (Supplement), 3-56
interfaces, 3-11
organizational, 3-12
physical, 3-13
shift, crew, and handover, 3-12
Isolation Certificate, cross-referenced, 3-18
Job Safety Analysis (JSA)
requirement for, 2-11
suspension and withdrawal, 3-9
Temporary Defeat Certificate, cross-referenced, 3-18
valid period, 3-8
work permit process
flowchart, 3-15
task details, 3-16–3-21, 4-17
**work site inspection, 2-17**
**Work Team, 3-4**
**workover (SIMOPS definition), 6-12**


## Z


**zero energy**
Company's energy isolation practice, 4-36
demonstration
isolations, personal, 4-45
work permit approval, 2-24, 4-39
energy isolation, 4-38
isolation integrity tests, 4-32
isolations, requirement for, 4-40

DocuSign Envelope ID: DBC83A32-C98A-4963-9E1E-44593247DA33



# Appendix A Production Unit Additional Information

## Overview

**Introduction**

The sections in this appendix are either required by this Work Management System or suggested PU inclusions. The individual Production unit decides the location of the additional information to make it readily available to all personnel (employees or contractors) involved in conducting work. Reference to local regulatory requirements are included when they meet or exceed the requirements of this Work Management System.

**Content**

This appendix may contain the following information (for example):

- Work Not Requiring a Permit
- Work That Can Be Performed by a Single Person in a Remote Field Operation
- Work That Can Be Performed Using a Personal Isolation
- Two and Four Permit Area Maps
- Day In the Life Of (DILOs)
- Local SIMOPS Matrix (If Required)
- Local Regulatory Requirements
- Additional Checklist

DocuSign Envelope ID: DBC83A32-C98A-4963-9E1E-44593247DA33



# Appendix A Production Unit Additional Information

## Overview

**Introduction**

The sections in this appendix are either required by this Work Management System or suggested PU inclusions. The individual Production unit decides the location of the additional information to make it readily available to all personnel (employees or contractors) involved in conducting work. Reference to local regulatory requirements are included when they meet or exceed the requirements of this Work Management System.

**Content**

This appendix may contain the following information (for example):

- Work Not Requiring a Permit
- Work That Can Be Performed by a Single Person in a Remote Field Operation
- Work That Can Be Performed Using a Personal Isolation
- Two and Four Permit Area Maps
- Day In the Life Of (DILOs)
- Local SIMOPS Matrix (If Required)
- Local Regulatory Requirements
- Additional Checklist

DocuSign Envelope ID: 39037C38-F68A-4933-A71A-3B6FD9071700



# System 6-4
# Work Management System

## EMCE – Appendix A

**System Owner:** [redacted]

**Asset System Administrators:** [redacted]

| | | | | |
|---|---|---|---|---|
| | DocuSigned by: [redacted] | DocuSigned by: [redacted] | DocuSigned by: [redacted] 7634EF1976814E7... | DocuSigned by: [redacted] 8E5321854EB44D8... |
| | EMCE System Administrator | Hibernia Asset Manager | Hebron Asset Manager | Operations Manager |
| | Originated | Approved for HMDC | Endorsed | Approved |

| | | | | |
|---|---|---|---|---|
| | DocuSigned by: [redacted] ABA2D0963FCB4A4... | | DocuSigned by: [redacted] 0CA0705951EE401... | |
| | Hibernia OIM | | Hebron OIM | |
| | Endorsed | | Endorsed | |

| | | |
|---|---|---|
| | DocuSigned by: [redacted] Hibernia/Hebron Drilling Superintendent | Revision Number: D11<br>Revision Date: December 2020 |
| | Endorsed | |

HEBRON DCN: CAHE-EC-OOREF-01-006-4002-000 REV: D9
HIBERNIA DCN: HS-O-O-X-A00-XX-0604.007 REV: D5

### Record of Revisions

| Revision | Section | Description |
|---|---|---|

DocuSign Envelope ID: 39037C38-F68A-4933-A71A-3B6FD9071700



| | | |
|---|---|---|
| D11 | 1.0 | Add statement for CCR Operator to countersign all Permits where the AO is a Disciplined Trades Person such as an Instrument Tech, Mechanic, Electrician working in an LER etc. |
| D11 | 12.0 | Add Confined Space Entry Class Determination Tables as per WMS Updates. |
| D11 | 2.0 | Update definition of a Temporary Defeat as per WMS updates |
| D10 | 11.0 | Add Quick Reference Guide – Gas/Norm Testing and Respiratory Protection Requirements |
| D10 | 10.0 | Update list of Low Risk Single Valve Isolations for Hebron Platform. |
| D10 | 4.0 | Add reference to SWP for Pyrophoric Material Management |
| D10 | All Sections | Remove all reference to Sable Project |
| D9 | 3.0 | To include reference to safety directive and deviation for Lifeboat PFD( Fall Prevention Devices) |
| D9 | 2.0 | Update Permit Dilo Work Site Verification : Make changes to conditions that must be adhered to when AGT is delegating Gas testing for short term/low risk activities to Permit Holder |
| D8 | 2.0 | Update to Permit Dilo: Pre-Issue Controls on the Permit DILO for Initial Gas Test no longer accurate since Initial Gas Tests cannot be electronically added in Permit Vision. Changed in Dilo |
| D8 | 2.0 | Update to JASR Dilo: JSA & JSAR DILO changed to match the new terminology (Create vs. Utilize) |
| D8 | 2.0 | Update to TD Dilo: SCC DILO changed to TD to match the new terminology (SCC vs. TD) |
| D8 | 8.0 | Non permitted work list adjusted to add weekly lifeboat PM's as stand-alone JSA only activity |
| D8 | 10.0 | Additional Drilling SBV's added to Hebron list |
| D7 | 2.0 | Pg 12 - Permit Process Details Table (Permit Review Section) Additional Text added re: Gas Testing |
| D7 | 2.0 | Pg 14 - Permit Process Details Table (Permit Issue Section) Additional Text added re: Gas Testing |
| D7 | 2.0 | Pg 16 - Permit Process Details Table (Work Site Verification Section) Additional Text added re: Gas Testing |
| D7 | 2.0 | Pg – New amended Isolation Dilo flow chart added to reflect changes in test to Out of Service equipment.<br><br>Previous text under Out of Service Equipment = MOC created with instructions (MOC mandatory after 6 months)<br><br>Revised text under Out of Service Equipment =<br>• Equipment that is in LTI for a period greater than 6 months should be evaluated using the MOC Process<br>• If equipment is deemed "out of service" it should be evaluated to determine if it should be removed, replaced or "positively isolated" using the Company's MOC process. |
| D7 | 3.0 | Text added to include reference to CNLOPB and CNSOPB RQFs applicable to Hebron, Hibernia and Sable Assets |
| D7 | 10.0 | Pg 41 – List of Low Risk Single Valve Isolations included for Hebron and Hibernia |

DocuSign Envelope ID: 39037C38-F68A-4933-A71A-3B6FD9071700



| | | |
|---|---|---|
| D6 | Section 1.0 | EM Rig Supervisor role added to AA position within the WMS roles by position table |
| D5 | Section 9.0 | Pg-41, Electrical section of Personal Isolations updated to include following text.<br>Testing and troubleshooting versus trouble shooting<br>Lighting Repairs versus changing lamps on lighting circuits<br>Testing/troubleshooting of heat trace and associated equipment |
| D5 | Section 2.0 | Pg-18, Text changes to Isolation DILO - ICC requirement to be filed with Isolation Control Point DILO - (Isolation In Progress section - #4, 5, 6, 7, Note and Completed section #4) |
| D5 | Section 2.0 | Pg 19,20,21 – Text changes to Isolation Process Details re: ICC w/ ICP |
| D5 | Section 6.0 | Pg-29, Functional Locks graphics updated |
| D5 | Section 5.0 | Pg-28, Added text for mandatory IC procedure attachment as per WMS 2.0 update |
| D5 | Section 5.0 | Pg-28, Added Permit pack required document checklist table |
| D5 | Section 2.0 | Pg-15, Changed text for “PH or Work Team Change out” as per WMS 2.0 update |
| D5 | Section 2.0 | Pg – 21, Changed DILO as per WMS 2.0 update |
| D5 | Section 2.0 | Pg—10, Changed MSDS to SDS as per WMS 2.0 update |
| D5 | Section 1.0 | Pg-7, Removed “Tow, Installation & Commissioning” roles & responsibilities<br>Added “AO role can be assigned to discipline trade personnel based on direction of PIC/AA” into AO role of Typical WMS Roles table |
| D5 | Introduction | Changed Deviation process text as per WMS 2.0 update |
| D4 | Cover | Hebron cover page and approval signatures |
| D3 | Section 8.0 | Non permitted work list updated |
| D3 | Section 3.0 | Added Nova Scotia regulations |
| D3 | Section 7.0 | Included list of Sable SWPs |
| D3 | Section 6.0 | EMCE functional lock descriptions |
| D3 | Section 7.0 | Updated text in LSA and added section Rotating Equipment LSA |
| D3 | Section 8.0 | Revision to Control to Work to text, added to text describing process for creating asset specific non-permitted work list. |

DocuSign Envelope ID: 39037C38-F68A-4933-A71A-3B6FD9071700



# Appendix A

**Introduction**

This document termed "*EMCE Work Management System – Appendix A*," is used for work execution in accordance with the Global Work Management System.

The Appendix ***must*** be used as specified as a supplement to the work requirements listed in the *Work Management System*

The Appendix ***will*** be reviewed annually during the System 6-4 annual review.

Variance from the required actions in this System by a Production Unit should be carefully considered. "Deviations" from the requirements in this System must be handled as follows:

- Deviations from the ***must*** or ***must not*** requirements **must** be approved by the Production Manager.
- No deviations are allowed for Prohibited activities in the SIMOPS Matrix (**Reference:** Section 6).
- Deviations to should or should not recommendations are at the discretion of the Production Unit

Approval for deviations is only granted if other safeguards will be introduced that maintain the safety of personnel, the environment, and facilities.

Deviations only apply for the duration of the work scope for a single work activity

Deviations are processed using the PU Deviation Request form (Reference: Section 1, "Tools") which includes Risk Assessment and clearly documents the proposed deviation and approvals.

An example of a deviation is the requirement of using an Authorized Gas Tester for initial gas testing prior to work commencing. If an authorized gas tester is not used, then a deviation is required.

Note: This deviation would only apply to the specific job scope and duration.

Where any contradiction to the Work Management System manual is found to exist, the Work Management System takes precedence.

DocuSign Envelope ID: 39037C38-F68A-4933-A71A-3B6FD9071700



# Table of Contents

*1.0 Permit to Work Overview ..... 6*

*2.0 Day in the Life Of (DILO) ..... 9*

**Flow Charts ..... 9**

**Permit (DILO) ..... 10**

**Isolation (DILO) ..... 20**

**Temporary Defeat (DILO) ..... 25**

**JSAR (DILO) ..... 28**

*3.0 Local Regulatory Requirements ..... 29*

*4.0 Safe Work Practice List ..... 31*

*5.0 Permit Pack Requirements Matrix ..... 33*

*6.0 EMCE Functional Locks ..... 35*

*7.0 Life Saving Action (LSA) ..... 37*

**Life Saving Action – Rotating Equipment ..... 39**

*8.0 List of Work not requiring a Permit ..... 40*

*9.0 List of Tasks performed using a Personal Isolation ..... 45*

*10.0 Lists of Low Risk Single Valve Isolations ..... 49*

**11.0 Quick Reference Guide - Gas/Norm Testing and Respiratory Protection Requirements ..... 65**

**12.0 Confined Space Entry Class Determination ..... 67**

**13.0 Interim Approvals ..... 68**

DocuSign Envelope ID: 39037C38-F68A-4933-A71A-3B6FD9071700



# 1.0 Permit to Work Overview

**Purpose and scope**

The purpose of Permit to Work System (PTWS) is to accomplish the following:

- Control the work activities and functional interfaces on Company facilities in order to prevent incidents resulting from uncontrolled work.
- Communicate information clearly to avoid an inadequate understanding of work task hazards.
- Gain necessary approvals and authorizations to execute work.
- Manage and control:
  - risks relating to individual operations and work tasks
  - procedures relating to the safety of individuals and facilities

The PTWS addresses the following work activities:

- Hot work
- Confined space entry
- General work
- Critical work
- Energy isolation
- Temporary defeats of critical devices

**Introduction**

Several independent parties may be involved in controlling, coordinating, and managing activities.

The following parties work together during the planning and execution phases of work:

**Operations:** is responsible for the care, custody, and control of the equipment and facilities.
**Work Team:** performs the work on the equipment and facilities.
**Site Management:** has oversight responsibility for PTWS to confirm that it is properly executed to confirm safe and effective work.

**Operations**

Operations are the owner of the facilities and have the expertise and skills to operate Company facilities. Operations have the following duties and expectations:

- Maintain monitoring and control of the operable systems and areas.
- Manage all required energy isolations.
- Safely prepare equipment and surrounding area prior to work commencement.
- Reinstate systems and isolations after completion of work.
- Maintain control of interfacing activities related to the operable systems and areas.

DocuSign Envelope ID: 39037C38-F68A-4933-A71A-3B6FD9071700



**Work Team**

The Work Team may be a single worker or a group of workers. In either case, the person responsible for safely performing the work is the Permit Holder (PH). This person must confirm that personnel in the team possess the correct expertise and skills for performing the work activity.

The Work Team:

- Has the expertise and skills for the specific work to be performed.
- Performs required safeguards related to the work activity.
- Confirms that work preparations and appropriate materials, tools, and equipment are in place.
- Confirms that the work site is safe in cooperation with the Area Operator (AO).
- Confirms that the work is executed according to the requirements of the Permit Pack.
- Recognize any changes in work scope that require work to STOP and changes to be addressed. If the work scope changes, the permit will be suspended and the job discussed with the Area Authority who will determine whether any changes are required to the Permit Pack e.g. new permit, revised JSA or a new SWP Checklist.

**Site management**

Site Management is responsible for overseeing the execution of PTWS and has the following duties and expectations:

- Coordinates and supervises work on Company facilities.
- Reviews the proposed work activity to confirm that potential interfaces are identified and appropriately managed.
- Review of work permits for completeness of job and safety planning efforts and endorsement of work permits as appropriate.
- Assesses and stewards the effectiveness of PTWS in controlling work and in achieving the goal of safe and efficient work on Company facilities.

**Steady State Operations Work Management System Position Schedule**

The table below defines the key work management roles by position that will be applied during Steady State Operations. Due to the organizational framework, roles and responsibilities can be assigned to an alternate position while maintaining safe planning and execution of this System. When assigning responsibilities to an alternate position the following guidelines should be considered:

- Persons assigned are deemed competent to fulfill the role and are capable of executing their responsibilities as outlined in the WMS.
- Site Management identifies and assigns roles to individuals, and ensures adequate safeguards exist to allow assigned person to perform the role.

| Position | Typical WMS Roles |
|---|---|
| **Person-in-Charge (PIC)** | Offshore Installation Manager, Production Supervisor, Plant Superintendent |
| **Area Authority / Area Authority Functional (AA/AAF)** | Production Supervisor, Services Supervisor, Drilling Supervisor, Production Lead, Functional Supervisors (e.g. Maintenance); EM Rig Supervisors. |
| **Area Operator (AO)** | Employees or contractors certified in WMS Area Operator role.<br>Note: AO role can be assigned to discipline trade personnel based on direction of PIC/AA . |

DocuSign Envelope ID: 39037C38-F68A-4933-A71A-3B6FD9071700



| | |
|---|---|
| | In the case of the AO role being assigned to a discipline trade personnel such as an Electrician, Instrument Tech, Mechanic, etc. the CCR Operator must countersign the permit as an awareness of the ongoing work. |
| **Permit Holder (PH)** | Discipline Lead, Work Crew Supervisor, or single individuals performing work under a permit. May be employees or contractors certified in WMS |
| **Isolating Authority (IA)** | Area Operators, discipline trade personnel (electrical, mechanical, instrument, etc), or persons deemed competent by site management |

DocuSign Envelope ID: 39037C38-F68A-4933-A71A-3B6FD9071700



# 2.0 Day in the Life Of (DILO)

## Flow Charts

The accompanying flow charts and details walk through the sequence involved in generating, developing and managing a permit pack.

DocuSign Envelope ID: 39037C38-F68A-4933-A71A-3B6FD9071700



# Permit

## Day in the life of (DILO)

### Requested

**Prior to Daily Work Coordination Meeting (DWCM)**

- PH 'Request' permit and identifies requirement for ICC/TD
- PH describes work scope, embeds JSA or attaches external JSA that is based on inherent hazards.
- PH attaches required Permit Pack (PP) Document as per PP Requirement Matrix (e.g. Checklist, MSDS / Procedures)
- PH/AO/IA creates ICC/TD plan (If required)

### Reviewed

**Prior to DWCM**

- AA/AAF 'Review's PP (Expectation ICC / TD processed to the required state, all internal and external documents attached for a "Complete" review).
- AA Initiates ICC / TD planning (if required)
- AA/AAF/AO/PH edits permit (if required)

### Endorsed (E)

**During DWCM**

- Person In Charge (PIC) and AA/AAFs review status of Live, "Authorized", Suspended and Reviewed permits
- PIC "Endorses" Reviewed permits discuss work which is to proceed the following day
- Nonpermitted work (eJSAs) reviewed/discussed
- SIMOPS addressed
- SHE Lead assign assessments for following day

### Authorized

**Day of work**

- AA "Authorizes" controls to be applied (ICC/TD/initial atmospheric test.)
- AA ensures required controls are in place prior to Authorization (when required).
- AA "Authorizes" work to proceed in ePTWS
- AIA signs and/or countersigns if required (Drilling / SS)

### Pre-Issue Controls

- Isolations in place
- TD's applied
- Pre-requisite controls verified
- JSA embedded and updated with inherent risks

### Issued

- AO conducts work site visit
- AO verifies controls are in place (Operations/ Drilling functional lock on ICP, if required)
- AO "Issues" or "Pre-Issues" the permit in ePTWS the day work is to commence
- AA / PIC "Issues" (eJSA) work to proceed in ePTWS

### Live

- PH perform site visit to identify real-time hazards
- AGT / PH performs atmospheric test and records results on the permit (If required)
- AO Demonstrates "Zero Energy" to the PH (if required)
- PH accepts the permit in ePTWS (Permit is ePTWS "Live", PH prints all required PP docs)
- AO and PH sign the PTW
- PH prints eJSA for nonpermitted work
- PH conducts TBT, team members signs "Work Team Declaration"
- PH places a copy of the permit or eJSA on the permit office board identifying team members and work ongoing
- PH applies functional lock on ICP (if required)
- Team performs LMRA
- PH ensures PP at the worksite
- AO monitors worksite activities during the shift

### Suspended (S)

- PH returns the PP to the permit office
- PH notifies the discipline supervisor of permit status
- PH removes permit from the Permit Office board and discuss job status with AO
- PH "Suspends" in ePTWS

### Authorize from suspend (A)

- If the work is to proceed the AA will "Authorize" the permit from Suspend

### Issued

- AO verifies worksite controls are in place (Atmospheric testing, TD & ICC integrity verified, zero energy demonstrated each shift)
- AO "Issues" the permit

### Job complete

### Job incomplete (I)

- PH returns the PP to the permit office
- PH notifies the discipline supervisor of permit status
- PH removes copy of permit/eJSA from Permit Office board and reports status to AO
- PH "Job Complete" or "Job Incomplete"
- If job "Complete", AA "Authorizes" controls (TD / ICC) to be removed
- PH adds and Lessons Learned including updates to JSAR

### PTW complete

- AO visits worksite to ensure no hazards present
- AO changes permit state to "PTW Complete"

### Archive (A)

- AA review assessment status, Action Items are addressed, and Lessons Learned captured
- AA "Archive" the PTW and eJSA n ePTWS
- AO ensures PP hardcopy filed

ExxonMobil

DocuSign Envelope ID: 39037C38-F68A-4933-A71A-3B6FD9071700



## Permit Process Details

| Task | Activity | Responsible Person |
|---|---|---|
| PTW Request | 1. Determine permit type required (General, Hot, Confined Space Entry or Critical).<br>2. Complete the required fields on the permit, include:<br>▪ Date of work<br>▪ Time of proposed work<br>▪ Specific location of work<br>▪ Equipment/system tag or ID number<br>▪ The Requester or Permit Holder (PH) and company name assigned to the job<br>▪ Provide details in the Work/Task Description. Ensure that the work scope and details are clear and sufficient to communicate to any person the location, activities, and equipment required to complete the job.<br>▪ The Requester selects the isolation type required (none, personal or Isolation Control Certificate [ICC] and indicates the need for a Temporary Defeat (TD) in the Permit Pack Document (PPD) or other. | Permit Requestor (PH, Planner, Supervisor or other person) |
| Permit Preparation | 1. The Requester or PH then initiates the Job Safety Analysis (JSA) after visiting the work site. When using a copied permit, the hazards and controls must be reviewed to confirm that the identified hazards are current.<br>2. A Reference JSA is typically used but it must accurately address the job scope and provide mitigations to the hazards that were identified. The PH engages the Work Team and other relevant functional group representatives in the JSA development, review and updating.<br>3. Ensure work/task description is reflected in the JSA and includes tools and equipment that are required for the job.<br>4. The Requester or PH reviews the Permit Pack Requirements Matrix to identify and provide all required Permit Pack Documents (PPDs). This Matrix indicates documents that are mandatory or to be reviewed and considered for the type of work. However, based on the JSA, the PH can identify additional external reference documents (Safe Work Practice Checklists, Integrity Critical Procedures (or Integrity Critical Procedure Checklist), Safety Data Sheets [SDSs], and others) that are also required to ensure the job progresses safely. | Permit Requestor<br>Permit Holder (PH) |

DocuSign Envelope ID: 39037C38-F68A-4933-A71A-3B6FD9071700



| Task | Activity | Responsible Person |
|---|---|---|
| | 5. If isolations (ICC) or Temporary Defeats (TD) are required, the PH can seek assistance and request an ICC and TD plan. The Isolating Authority (IA) and Area Operator (AO) in consultation with the PH (as required) will develop the ICC and TD plans to be included in the Permit Pack.<br>6. The IA in consultation with the Area Operator (AO) and Control Room Operator (as required) will only perform the isolations and defeats when directed by the Operations / Drilling AA.<br>7. Isolation Certificate and Temporary Defeat certificates must be linked (cross-referenced) to the permit(s). In some instances, the Operations /Drilling AA may decide not to link a TD to a permit in order to aid in ongoing operations. | PH/AO/IA |
| Permit Review | 1. The Permit Holder (PH) reviews the Permit Pack (PP) with the Area Authority (AA).<br>*Note:* The AA for the PP review can be a functional supervisor or a lead that has the knowledge and understanding of the proposed job. For the purpose of reviewing a PP during the permit review stage, the role is referred to as the Area Authority Functional (AAF).<br>2. The AA/AAF, in consultation with the PH, reviews the PP to ensure all hazards and controls are identified and PP requirements are correct. If isolations or temporary defeats are required, the AAF should consult with the AA (Operations / Drilling) to verify that all ICC and TD requirements are accurate and the AA (Operations / Drilling) is aware the task is in the planning stage before progressing the permit to *Reviewed* state.<br>3. The AA/AAF shall review the PP Requirements Matrix to confirm all required Permit Pack Documents (PPDs) are included in the PP.<br><br>NOTE: For confined space entry permits, the AAF is to review the permit pack with the Production Supervisor to ensure all WMS expectations are met within the pack including description, PTW / ICC cross referencing and JSA hazards and controls.<br><br>4. When the PP is fully prepared, the AAF will set the date on the permit to ensure it is not included in the PIC permit search during the Daily Work Coordination Meeting (DWCM). The AAF will then advance the permit to the *Reviewed* state<br>5. The day prior to the permit is scheduled to be endorsed; the AAF will reset the date on the permit to reflect the following day. This will allow the PIC to search permits to be endorsed at the DWCM.<br>6. The day the permit is planned to be endorsed, the AAF must notify the PH and AO to perform a review of the PP in preparation of the following day permitted activity. | PH and AA (Operations /Drilling /Site Services) /AAF<br><br>PH and AA (Operations /Drilling /Site Services) /AAF<br><br>AAF /PH /AO |

DocuSign Envelope ID: 39037C38-F68A-4933-A71A-3B6FD9071700



| Task | Activity | Responsible Person |
|---|---|---|
| Permit Endorsement | After review by the AA/AAF and PH, the Permit is endorsed by the PIC at the Daily Work Coordination Meeting (DWCM).<br>A comprehensive check for any SIMOPS or conflicting work issues will be conducted before the permit is moved to the *Endorsed* state.<br>In some cases, the PIC may verbally endorse break-in permits allowing the work to progress.<br>In some instances job specific isolations and/or TDs may be required to be discussed at the DWCM.<br>It is the responsibility of the AA (Operations / Drilling) to assign duties in performing Isolations and Temporary Defeats. The AA (Operations / Drilling) may want to arrange for isolation points or a TD to be applied at a specific time in the operation.<br>The Isolating Authority (IA) develops the isolation and TD plans and submits it to the Operations AA for verification. The IA in consultation with the Area Operator (AO) and Control Room Operator, as required, performs the isolations and defeats when required.<br>Isolation Certificate and Temporary Defeat Certificates must be linked (cross-referenced) to the permit(s). | Person in Charge (PIC)<br>AA (Operations / Drilling) |
| Authorization | On the day the permit is required, the AA (Operations /Drilling /Site Services) who is responsible for managing the permitted activities in their area, *Authorizes* the permit to go to the "Live" state if there are no conflicting activities.<br>Note 1: The AA (Operations /Drilling /Site Services) may elect that any isolations or TDs associated with the permit are in place before the permit is Authorized (when required).<br>Note 2: A TD can be a prerequisite to a permit been issued or a stand-alone TD at the discretion of the AA (Operations /Drilling /Site Services).<br>Note 3: For Confined Space, Hot Work permits, an Authorized Gas Tester (AGT) shall perform an atmospheric test. For Critical (Spark Potential) permits an AGT or the PH shall perform an atmospheric test of the area and record the results on the Atmospheric Test Record. The AA (Operations /Drilling /Site Services) then ensures the initial atmospheric tests are recorded and acceptable for the work to commence. | AA (Operations /Drilling /Site Services) |
| Permit Issue | The AO must familiarize them with the work scope, work site, confirm that the required Isolations or TDs are in place and it is safe for the work to commence before progressing the permit to the *Issued* state. | AO |

DocuSign Envelope ID: 39037C38-F68A-4933-A71A-3B6FD9071700



| Task | Activity | Responsible Person |
|---|---|---|
| Permit Endorsement | After review by the AA/AAF and PH, the Permit is endorsed by the PIC at the Daily Work Coordination Meeting (DWCM).<br>A comprehensive check for any SIMOPS or conflicting work issues will be conducted before the permit is moved to the *Endorsed* state.<br>In some cases, the PIC may verbally endorse break-in permits allowing the work to progress.<br>In some instances job specific isolations and/or TDs may be required to be discussed at the DWCM.<br>It is the responsibility of the AA (Operations / Drilling) to assign duties in performing Isolations and Temporary Defeats. The AA (Operations / Drilling) may want to arrange for isolation points or a TD to be applied at a specific time in the operation.<br>The Isolating Authority (IA) develops the isolation and TD plans and submits it to the Operations AA for verification. The IA in consultation with the Area Operator (AO) and Control Room Operator, as required, performs the isolations and defeats when required.<br>Isolation Certificate and Temporary Defeat Certificates must be linked (cross-referenced) to the permit(s). | Person in Charge (PIC)<br>AA (Operations / Drilling) |
| Authorization | On the day the permit is required, the AA (Operations /Drilling /Site Services) who is responsible for managing the permitted activities in their area, *Authorizes* the permit to go to the "Live" state if there are no conflicting activities.<br>Note 1: The AA (Operations /Drilling /Site Services) may elect that any isolations or TDs associated with the permit are in place before the permit is Authorized (when required).<br>Note 2: A TD can be a prerequisite to a permit been issued or a stand-alone TD at the discretion of the AA (Operations /Drilling /Site Services).<br>Note 3: For Confined Space, Hot Work permits, an Authorized Gas Tester (AGT) shall perform an atmospheric test. For Critical (Spark Potential) permits an AGT or the PH shall perform an atmospheric test of the area and record the results on the Atmospheric Test Record. The AA (Operations /Drilling /Site Services) then ensures the initial atmospheric tests are recorded and acceptable for the work to commence. | AA (Operations /Drilling /Site Services) |
| | **Note:** When the work involves different operating areas or could impact another activity, the relevant Area Interface Authority (AIA) countersigns the permit prior to *Issue*. The counter signature signifies that they are aware of the proposed work and it does not conflict with activities under their control or other work in their area.<br>**Note:** For Confined Space and Hot work permits, the Production Supervisor / Night Shift Production Lead **must** Authorize the permits regardless of area on platform. The AA for the respective area of work, if not Production, (Drilling / Services) will countersign the permit before it progresses. | AIA<br>AA (Operations /Drilling /Site Services) |

DocuSign Envelope ID: 39037C38-F68A-4933-A71A-3B6FD9071700



| Task | Activity | Responsible Person |
|---|---|---|
| Permit Acceptance | Once the permit is *Issued* by the AO, the PH:<br>1. Can accept the permit electronically. The permit state changes to *Live* in the electronic system. However the permit is not considered live and work **must not** commence until the AO and PH signs the printed permit.<br>2. Prints the PP documents and takes it to the work site. A site and general area inspection is conducted to identify any unsafe conditions.<br>Note: The PH shall accept the permit electronically and sign the printed permit at the worksite. | PH |
| Work Site Verification | Several verification steps must occur before the final permit wet ink signatures by the AO and PH and commencement of work. | |

DocuSign Envelope ID: 39037C38-F68A-4933-A71A-3B6FD9071700



| Task | Activity | Responsible Person |
|---|---|---|
| | ▪ Once the AO verifies the isolation integrity and demonstrated zero energy, the AO verifies that the work site controls identified in the PP are put in place and then signs the permit. This also includes any atmospheric (gas) tests required for the job. Initial test(s) results must be recorded by wet ink on the Atmospheric Test Record.<br>**Note:** Gas testing is normally performed by an Authorized Gas Tester. However, gas testing for Critical (Spark Potential) permits that involve short-term / lower risk activities can be delegated to the Permit holder. Some jobs may require frequent or continuous checking, and gas testing may be delegated to the PH provided the following conditions are adhered to:<br>▪ **Short-term, lower-risk activities:** This includes use of a camera, opening junction boxes, and so forth. A continuous gas testing device will be provided to the individual only after the individual:<br>- Permit holder has completed the mandatory Gas Monitoring Awareness training and can demonstrate competence in the use of four head personal gas monitor to Area Operator, who is an AGT<br>- Area Operator (AGT trained) documents gas testing requirements on Atmospheric Test Record and documents that gas testing / continuous monitoring is delegated to permit holder<br>- Area operator briefs Permit Holder on any additional hazards to be aware of<br>- Can explain what actions are to be taken if the gas detector alarms<br>**Note:** Gas Testing for Confined Space / Hot Work permits will be completed by the AGT once all other controls are in place for the permit. The AGT will complete the gas test, determine entry class for CSE and inform Production AA. Once gas testing is complete the AO will wet ink the gas test record and wet ink the permit as issued. There **must** be a step in the JSA for the AO/AGT to inform the Production AA of gas test results prior to final wet ink signatures | AO/AGT |
| | 1. Once the Permit is signed by the AO, the PH must conduct the toolbox meeting with the Work Team before each member signs the Work Team Declaration Section of the permit.<br>The PH and Work Team must verify that each control identified in the Permit Pack is in place when required. Controls to mitigate hazards are identified on the JSA and assigned to members of the Work Team. The Work Team member must ensure the mitigation /control listed on the JSA is in place when required and initial stating the control is applied. Some controls may have to be applied at different phases of the operations. If so, the PH will coordinate with the responsible team member. The PH signs the permit and the permit goes Live at this point.<br>**Work can commence!** | PH and Work Team |

DocuSign Envelope ID: 39037C38-F68A-4933-A71A-3B6FD9071700



| Task | Activity | Responsible Person |
|---|---|---|
| Work Execution | 1. All personnel involved with the job are to ensure that all required controls from the Permit, JSAs, and SWP checklist and Integrity Critical Procedures (or Integrity Critical Procedure Checklist) are in place when required.<br>The team members must perform a last minute risk assessment (LMRA) before, during and after the job. | PH and Work Team |
| | 2. <u>Shift Requirements:</u><br>The AO and PH sign the permit each shift after all required demonstration and verification has taken place.<br>The work team members will sign the "Work Team Declaration "each shift following the toolbox talk.<br><br>Note: The permit is not considered "*Live"* until it is "*Wet Ink*" signed by the AO and PH in the field. ("*Wet Ink*" signatures are required each shift as validation all required safety checks for the PP have been performed, i.e. SWP checklist, isolation verified, zero energy demonstrated, JSA duties identified etc.) | AO, PH and Work Team |
| | 3. <u>Permit Extension:</u><br>Should there be a need to extend the duration of the permit to work beyond the shift to complete the job or activity. The PH requests the extension and a same shift extension can be approved by agreement between the PH, AO, and AA to a maximum of 16 hours total from the start of the shift.<br>The AA can approve the extension for up to 4 hours after shift change provided the work is being completed by the same crew. The AO must be notified when this occurs.<br>The extension can only be processed in the last hour of the shift in the electronic system. | AAF, AO and PH |
| | The work can continue through the shift changes; however, the incoming AO must visit the work site and sign the paper copy of the permit, then both incoming AO and AA countersign the permit in the electronic system, providing the reason for the countersignature. | AAF and AO |
| | 4. <u>PH or Work Team Change out:</u><br>When the PH changes out during the shift, the oncoming PH signs the field copy permit after reviewing the Permit Pack, confirming the isolation control point (ICP) functional lock is in place, and signs the permit. The AO must demonstrate zero energy when required.<br>Note: The AO will be notified when the PH changes out.<br>When the Work Team changes out the PH must review the Permit Pack, confirm controls are in place and conduct a toolbox meeting with the Work Team prior to the Work Team signing the "Work Team Declaration." | AAF, AO, PH and Work Team |

DocuSign Envelope ID: 39037C38-F68A-4933-A71A-3B6FD9071700



| Task | Activity | Responsible Person |
|---|---|---|
| | 5. <u>Permit Suspended</u><br>A work permit can be suspended or withdrawn in the following situations:<br>• If anyone is seen working in noncompliance or an unsafe manner<br>• Urgent conflicting work develops<br>• An emergency occurs or an emergency alarm sounds<br>• Work scope changes that does not align with the permit conditions and controls<br>• If the work will continue on the following shift or day<br><br>When a permit is Suspended, the PH shall:<br>1. Return the PP to the permit office<br>2. Notify the AO of permit status<br>3. Notify the discipline supervisor of permit status<br>4. Update status of permit in ePTWS as *Suspended*<br><br>Upon notification by the PH that a permit is Suspended, the AO shall:<br>1. Inspect the worksite to ensure it is returned to a safe condition.<br>Note: Depending on timeline for shift handover, the AO can handover site inspection to the next shift. | PH/AO<br><br>PH<br><br>AO |

DocuSign Envelope ID: 39037C38-F68A-4933-A71A-3B6FD9071700



| Task | Activity | Responsible Person |
|---|---|---|
| Permit Close-out | 1. When the work has been completed or when the work has stopped under the conditions and duration of the permit, the permit must be closed out.<br>2. The PH is responsible for accounting for all personnel involved in the work, and the work site is restored to a safe and tidy condition. The PH is also responsible for communicating if the job has been completed or, if not, the status of the work to the AO and AAF<br>3. Once the PH completes the job, the PH notifies the AO and returns the work site copy of the PP to permit office<br>4. The PH can move the permit to *Job Complete* or *Job Incomplete*.<br>5. For work that involves isolations or TDs, the AO confirms that the job is complete, and then notifies the AA (Operations / Drilling) of the job status.<br>6. The AA(Operations / Drilling) authorizes the controls to be removed if there are no other permits linked to the ICC or TDs.<br>7. Once the isolations or TDs (or both) are removed and the AO has inspected the work site for potential hazards, the AO progresses the permit to *PTW Complete*. | PH, AO and AAF<br><br><br><br><br>PH and AO |

DocuSign Envelope ID: 39037C38-F68A-4933-A71A-3B6FD9071700



# Isolation

## Day in the life of (DILO)

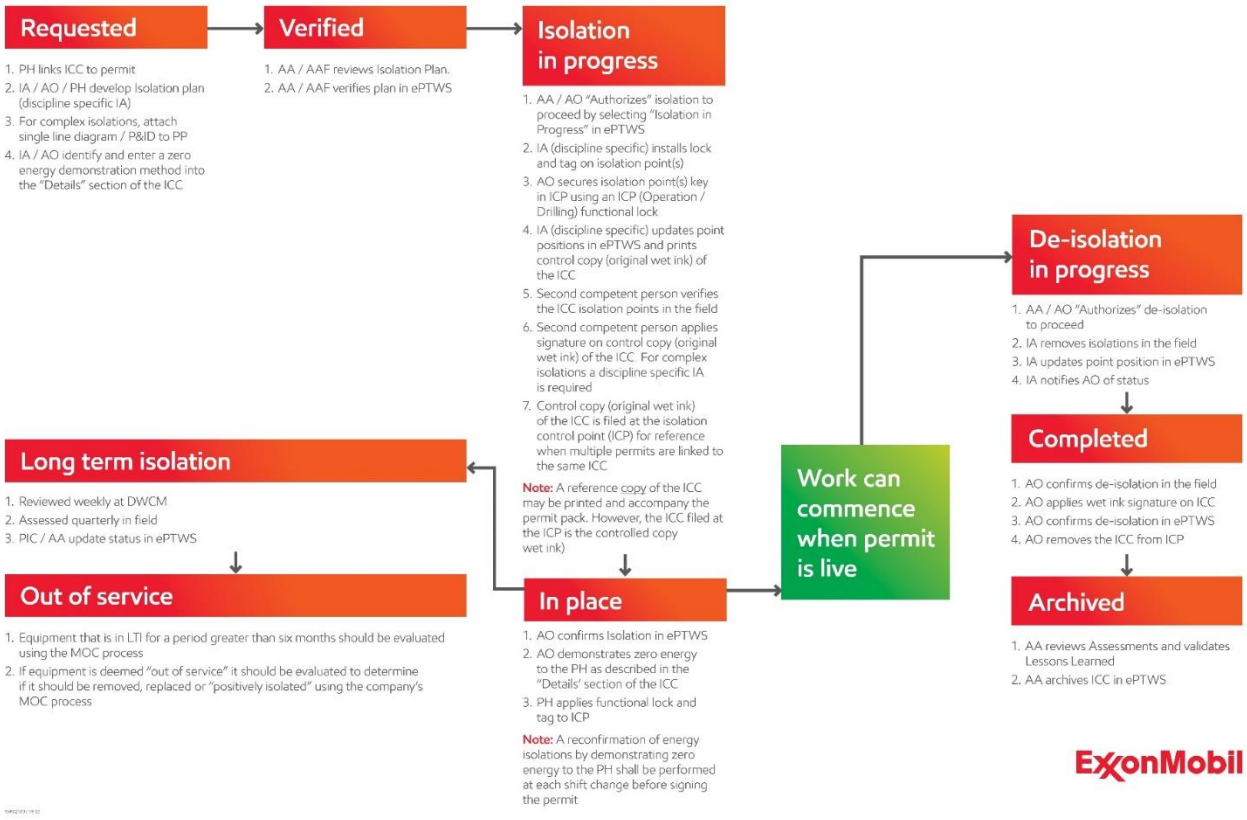

DocuSign Envelope ID: 39037C38-F68A-4933-A71A-3B6FD9071700



## Isolation Process

Use the following process for preparing and executing energy isolations to confirm that appropriate steps have been taken to isolate energy sources. In addition, a job-specific isolation procedure may be required when an electrical or mechanical isolation is undertaken, depending on the complexity of the job.

**Isolation Confirmation Certificate (ICC) Process**

When multi isolation points and multiple disciplines are required to plan an ICC, the AO for the requested permit will arrange the Isolation Authority (IA) to participate in the planning process. For normal operations, a single Isolation Confirmation Certificate (ICC) will be utilized to capture all discipline isolation points and linked to the requested permit. During stage one (planning process) the Isolation Authority will list the required isolation points to ensure zero energy is achieved. The Isolations points must be verified by the Area Authority (AA) or AAF before it can be applied.

During stage two (Isolation in Progress) the AO will provide the IA with the required isolation locks and tags for the isolation points in the field. The AO will secure the isolation point key(s) in an Isolation Control Point (ICP) lock box and apply an Operations / Drilling functional lock and tag to the ICP. The AO will verify the isolation points in the field and confirm the integrity of the Isolation by demonstrating zero energy to the PH prior to applying a wet ink signature to the Isolation Verification section of the ICC.

The AO will file the control copy (original – wet inked) ICC with the Isolation Control Point (ICP) for reference when attaching the ICC to multiple permits.

A reference copy of the ICC may be printed to accompany the permit pack. However, the ICC filed at the ICC is the controlled copy (original – wet ink).

**ICC Process Scenario**:

Using a simple scenario where a mechanic has requested a permit to inspect the blades on an HVAC fan assembly. The permit and linked ICC task description will identify the work scope for the required isolation. The AO/PH agrees that an IA is required to assist and develop an isolation plan.

During stage one (planning), the IA enters the isolation point on the ICC. The Isolation plan is then verified by the Area Authority (AA) or AAF before it can be applied. (Note: A review of drawings or other documentation may be required depending on isolation complexity)

During stage two (Isolation in Progress), upon confirmation from the AA to apply the isolation, the AO would notify an IA to apply the isolation lock and tag in the field. When the IA has applied the isolation and “Updated Point Position” in ePTWS, the AO is notified of the isolation status.

To complete stage two (Isolation In Progress) the AO will verify the isolation point(s) listed on the ICC Point Summary are the same as listed after the IA has ‘Updated Point Position’ on the ICC. The AO will also confirm the same isolation point(s) listed in the Points Summary match the Equip. ID / Description on the isolation cubicle name tag, ICP (lockbox) details and devices (lock & key) are correct. When confirmed, the AO/IA will apply a wet ink signature to the Isolation Verification section of the ICC. Prior to Issuing the permit, the AO will contact the PH to accompany him /her in the field to witness a zero energy demonstration. The AO will demonstrate zero energy to the PH as described in the “Details” section of the ICC. When satisfied the ICC documentation and isolation integrity is correct, the AO will confirm the ICC in ePTWS and file the control copy of the ICC at the ICP.

DocuSign Envelope ID: 39037C38-F68A-4933-A71A-3B6FD9071700

DocuSign Envelope ID: 39037C38-F68A-4933-A71A-3B6FD9071700



## Isolation Process Details

| Task | Action |
|---|---|
| PH /AO/IA | During the "Requested' stage of the ICC process. Plan and prepare the isolation by completing an Isolation Control Certificate (ICC).<br>a) For complex electrical isolations, review the appropriate electrical diagrams to identify the isolation, grounding and test points. A copy of these marked-up electrical diagrams shall be included in the Permit Pack.<br>b) For complex process isolations or when lines are not visibly traceable in the field, review the Piping and Instrumentation Drawings (P&IDs) and mark up the energy points that need to be isolated, flushed, or purged. A copy of these marked-up P&IDs shall be included in the Permit Pack<br>c) For complex mechanical isolations, review the equipment drawings and identify any moving parts that must be stopped, wedged, removed, or uncoupled.<br>A copy of these marked-up P&IDs shall be included in the Permit Pack<br><br>If necessary, compare the P&ID for the system to be isolated to the actual system (also known as "walking the lines") to confirm that the P&ID is accurate and to identify:<br>d) Low points where liquids may not be drained<br>e) Drain, vent, and test points in piping or vessels<br>f) Instrumentation that needs to be protected or defeated<br>g) Bleed points, vents, gauges, or break methods where zero energy can be confirmed |
| | **Note:** Depending on complexity, prepare a job-specific energy isolation procedure.<br>If necessary, perform an engineering review to confirm that the design limits are not exceeded:<br>▪ If filling vessels and pipework with water, which would not normally be exposed to full water volumes (static head and specific gravity)<br>▪ When pressure testing the isolations;<br>➢ Confirm that all specification changes are accounted for in the isolation procedure.<br>➢ Depending on complexity, energy sources, and magnitude of the isolations, consider performing a Structured Risk Assessment on the proposed energy isolation plan (consult a Risk Screener). |
| AO/IA | Document how zero energy will be demonstrated to the Permit Holder in the 'Details" section of the ICC |
| AA/AAF | During the "Verified" state of the ICC, the ICC plan is reviewed and if isolation point(s) are satisfactory, the ICC is "Verified" in ePTWS |
| AA/AO | During the 'Isolation in Progress" state of the ICC, permission is granted to proceed with the isolation as described in the isolation plan. Clear direction is given on when the isolation(s) are to be applied. |
| AO/IA | Tags will be printed with specific information and applied to the isolation locks with the IA name printed and initialed on the tag. |

DocuSign Envelope ID: 39037C38-F68A-4933-A71A-3B6FD9071700



| Task | Action |
|---|---|
| AO/IA | During the "Update Point Position" state of the ICC, the IA responsible to apply the isolation will receive communication from the AO and will confirmed that the 'Update Point Position" state is active in ePTWS and will proceed to:<br>a) Apply locks and tags as listed on the ICC using isolation locks from the keyed alike lock set.<br>b) Update point position status in ePTWS.<br>c) the AO will place the key(s) from the lock set(s) used on each isolation point in the ICP box and place a uniquely keyed Operations / Drilling control lock (specific color) on the ICP. An ICP lock box tag will be displayed in the ICP box or attached to the Operations / Drilling control lock with details of the ICC. |
| IA/AO | The IA/AO will verify the isolation in the field is correct. The IA/AO will sign the control copy of the ICC to be filed at the Isolation Control Point (ICP). |
| AO | During the "*In Place*" state of the ICC, following confirmation in the field of the isolation as listed on the ICC, the state will change in ePTWS to reflect "*In Place*" |
| AO/PH | Following the '*Issued"* state of the PTW, the AO will demonstrate isolation integrity (zero energy) to the PH. The PH shall:<br>a) Place a uniquely keyed Functional (discipline color) lock and tag onto the ICP box to maintain control of the isolation key while work is performed or if the equipment is not operational due to discipline outstanding tasks.<br>b) Place the key to the Functional (discipline color) lock in a secure location as agreed by discipline supervisor and work team.<br>c) ensure provision is allowed for the application of discipline locks (discipline color) by work team members upon request |
| PH | As each job is completed, the PH "*Job Completes*" their permit and removes their Functional lock from the ICP box. |
| AA/AO | During the "*De-isolation in Progress"* stage of the ICC, permission will be granted to de-isolate when all permits linked to the ICC are *"Job Complete".*<br>Note: If the equipment is not restored to an operational state, the isolation will be transferred to a Long Term Isolation (LTI). If work is not completed by the responsible discipline and the permit is "*Job Incomplete"* status, the responsible discipline will maintain a functional lock on the ICP |
| AO/IA | During the "*Update Point Position"* stage of the ICC, the AO shall<br>a) Request isolation point(s) listed on the ICC to be removed by the IA.<br>b) Request IA to update point status in ePTWS. |
| AO | During the *"Completed"* stage of the ICC, confirmation is made that the isolation has been removed and the equipment is ready for use. |
| AA | During the *"Archived"* stage of the ICC, the ICC is archived |

DocuSign Envelope ID: 39037C38-F68A-4933-A71A-3B6FD9071700



# Supplementary Control Certificate

## Day in the life of (DILO)

**Requested**

1. Identify scope of SCC
2. "Complete" SCC THA to identify hazards and mitigating controls
3. Check for approved device bypass procedure.
4. Determine possibility of COP
5. Link to relevant Permit and add a Pre-Requisite Control(s) in Permit eJSa

**AA approved**

1. AA reviews SCC Plan
2. If COP identified, follow COP Approval Process
3. AA approves application of defeat in ePTWS

**Defeat applied**

1. AO ensures that mitigating controls on SCC are in place
2. AO applies SCC in ePTWS (in some instances the defeat is applied in the field)
3. Linked permits can be "ISSUED"
4. Competent person executes defeat

**Work can commence**

**Day shift** – AA will inform the OIM once the SCC has been applied. The OIM will review at the DWCM and endorse for up to 7 days

**Night shift** – AA will approve SCC applied during the night and inform the OIM at the start of his shift of any SCCs applied during the shift that requires extension approval.

**Approve to reinstate**

1. AO informs AA of job completion
2. AA approves to reinstate in ePTWS

**Defeat removed**

1. AO / PH removes SCC
2. AO removes defeat in ePTWS

**Archived** A

| Approval flow | |
|---|---|
| Area authority | End of shift (Up to 12 hours) (Inform OIM) |
| OIM | 12 hours - 7 days |
| Operations Superintendent | 7 to 30 days (Inform Superintendent at 6 days) |
| Operations Manager | **30 days, resign every 30 day interval** (Inform OM at 28 days) |

ExxonMobil

DocuSign Envelope ID: 39037C38-F68A-4933-A71A-3B6FD9071700



## Supplementary Control Certificate (SCC)

Occurs when a critical device or a critical system is bypassed, inhibited, **impaired**, over-ridden or taken out of service while the equipment or facility being protected remains in service

**Critical devices:** Individual components, sections, or the whole of a critical system.

Examples of critical devices are:

- A lifeboat, fast rescue craft, or escape craft
- A component or section of the fire main, fire door, fire wall penetrations
- Fire Water Pumps
- A fire, gas, heat, or smoke detector
- Vibration monitors
- An emergency shutdown (ESD) activation point
- Public address (PA) systems (if part of a facility emergency response system)
- Critical Operating Parameters (COP) related alarms
- Critical alarms e.g. $H_2S$, LEL, fire, or abandon facility lights and horns
- Well surface and subsurface valves and controls
- Limit switches (for example, crane limits or drill rig crown saver)
- Pressure safety valves (PSVs) and rupture disks where no redundancy exists
- Critical process safety devices such as:
  - Level shutdown high-high (LSHH)
  - Level shutdown low-low (LSLL)
- Isolation valves on control or safety systems

**Planning:**

When planning the temporary defeat of a critical device or system, the following should be considered:

- Critical protective devices that will be defeated.
- Existing TDs in the same area or on the facility.
- Equipment or systems that will be unprotected.
- Method by which the critical device will be defeated.
- Expected duration of the defeat(s).
- Completing the SCC THA to identify the hazards and establishing alternative (mitigative or preventative) controls.
- Evaluation as to whether a situation could be created that results in the need for manual intervention.
- Level of approval required.

**! WARNING:** If an adequate level of protection cannot be provided and maintained, then the work requiring the SCC/s will be deferred or the protected equipment will be shut down for the duration of the defeat.

DocuSign Envelope ID: 39037C38-F68A-4933-A71A-3B6FD9071700



## Temporary Defeat Process Details

| Task | Activity |
|---|---|
| 1. | Plan and prepare a Temporary Defeat (TD) by completing a SCC, referred to as a Supplementary Control Certificate (SCC) in ePTWS.<br>Review the local FIMS "Critical Devices" list to identify devices that may require a SCC. A SCC is typically related to "A" Critical equipment per FIMS (SSHE Consequence 1 & 2).<br>For complex Temporary Defeats, review the appropriate drawings or diagrams to identify the required device to be defeated, inhibited, overridden, and/or bypassed. A copy of these marked-up diagrams should be included in the Permit Pack.<br>When multiple devices are required to be defeated (for example, fire and gas preventive maintenance [PMs]), the AA can approve devices to be sequentially defeated as listed on the permit. |
| 2. | The Requestor selects the SCC category (Electrical, Mechanical, Safety, or Instrument/Process). |
| 3. | List the devices to be defeated, and the reason why the defeat is required, on the SCC. |
| 4. | If necessary (e.g. complexity, types of device and magnitude), consider performing a Structured Risk Assessment of the TD plan and provide details in the SCC. The Approver can consult a "Risk Screener" who will determine whether a Structured Risk Assessment is required. |
| 5. | The Requestor must indicate whether defeating the device will result in a critical operating parameter (COP). If yes, provide details in the SCC and have the Operations Manager approve the SCC. |
| 6. | Complete a SCC Task Hazard Analysis (THA) to identify the hazards and establish alternative (mitigative or preventative) controls. Identify specific hazards and define specific mitigation controls to be implemented during the defeat. |
| 7. | In the Cross-Reference Certificates section of the SCC, a permit can be cross-referenced or linked to the SCC. The permit can be "Issued" without the TD "In Place."<br>Prerequisite control should be used when a TD must be in place before the job commences (for example, to avoid a shutdown). The defeat can be added as a prerequisite control in the JSA to prevent the permit from being issued until the defeat is "In Place." |
| 8. | Temporary defeat of critical devices or systems must be approved by the Area Authority up to the end of the shift. Higher management approval will be sought by the Area Authority, if necessary, due to the magnitude or duration of the proposed defeat. Once a TD has been applied, the OIM must be informed of the status. The OIM will then review the requirement of the TD at the DWCM and endorse as required. |
| 9. | Temporary defeats should be closed as soon as possible after the work requiring the defeats is complete. The Area Authority is required to approve reinstatement prior to the Area Operator removing the defeat. |
| 10. | The Area Authority can move the TD to the Archive state. |

DocuSign Envelope ID: 39037C38-F68A-4933-A71A-3B6FD9071700



# JSAR

## Day in the life of (DILO)

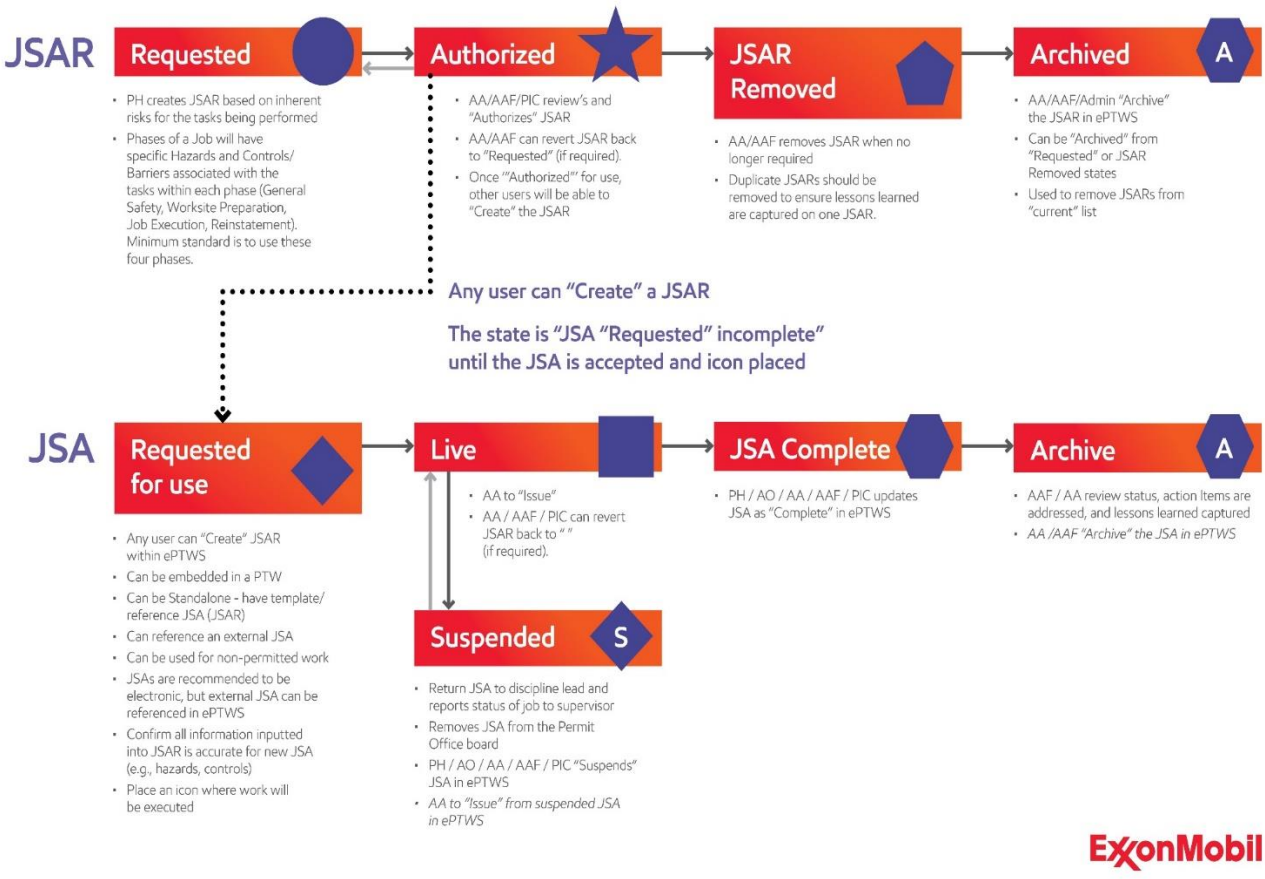

DocuSign Envelope ID: 39037C38-F68A-4933-A71A-3B6FD9071700

# 3.0 Local Regulatory Requirements

**Laws and regulations**

EMCE will comply with all applicable laws and regulations, as well as adhere to all CNLOPB RQFs involving Hebron and Hibernia when applying this System including application of permissible mechanisms wherein the Company is granted written approval to operate under specific design codes, specifications, or protocols. In addition to the regulatory requirements, the Company may also place additional requirements on operations that will meet or exceed regulatory requirements.

These and other applicable subordinate regulations, Company-specific approvals, plus obligations deriving from them will be maintained in accordance with OIMS System 4-2 Compliance with Laws, Regulations, and Permits along with the Production Unit's *Regulatory Compliance Manual*.

References:

Newfoundland Offshore Petroleum Drilling and Production Regulations

Newfoundland and Labrador Offshore Marine Installations and Structures Occupational Health and Safety Transitional Regulations

EMCE will adhere to pertinent regulatory notices and regulatory query forms (RQFs). These notices and RQFs will be referenced in applicable safe work practices.

All safe work practices shall reflect any RQFs in place that affect or pertain to the activities within that safe work practice

**Lifeboat Safety Directive**

DocuSign Envelope ID: 39037C38-F68A-4933-A71A-3B6FD9071700

**Due to several Marine Industry Fatal Lifeboat Incidents the following Executive Safety Directive has been issued**:

**Personnel will only be permitted to enter lifeboats during the following conditions:**

- **During emergency evacuation**
- **During Maintenance Activities with Harbor Pins and Fall Preventer Devices (FPD) installed.**

Due to the design of the lifeboats and facilities on Hibernia and Hebron, personnel are required to enter lifeboats to install Fall Preventer Devices for a short duration (approx. 10 minutes) prior to completing the required maintenance, inspection and/or training.

This deviation from the Lifeboat Safety Directive has been risked assessed and fully approved in Risk Assessment - 069 - Personnel Entering Lifeboats Without Fall Preventer Devices (FPD's) completed on October 1/2019

To reduce any risks involved with the installation of the FDP's all maintenance activities, safety checks, inspections, etc. should be planned and scheduled to coincide with the installation of these devices during Sunday's Lifeboat Maintenance PM's.

Any unplanned task not requiring pendants would require a permit and would need PIC and AA approvals to conduct the work.

DocuSign Envelope ID: 39037C38-F68A-4933-A71A-3B6FD9071700

# 4.0 Safe Work Practice List

**Introduction**

Using Safe Work Practices (SWP) can prevent most incidents that affect personal safety. The intent is to ensure that written instructions have been developed for all activities with potential risk exposure to personnel performing work.

SWP Checklists included in the Permit Pack must be completed as the job progresses through the planning, preparation, execution, and closeout phases. The PH will confirm that any checklist items that are required before the job commences are in place and will ensure that all required checklist items are checked as the job progresses.

By signing the permit each shift, the PH acknowledges that all Permit Pack requirements are being followed and implemented when required, including the Checklist items. The work team also accepts that the checklist items will be addressed when they add their name to the permit Work Team Declaration.

For non-permitted work, signing the JSA will also acknowledge that any checklist items are being followed and implemented when required

Checklists are tools to facilitate compliance with Safe Work Practices from job planning through to closeout. Signatures are handled by the permit or JSA (for non-permitted work) processes. Checklists are typically contained on one page.

Line items must not be deleted from the SWP Checklists in the WMS manual. Justifiable items can be added to a checklist by the PU e.g. regulatory checks.

Applicable Integrity Critical Procedures (or Integrity Critical Procedure Checklist) and applicable Safe Work Practice Checklists must be part of the Permit Pack. PU procedures and safe work practices should align with the Upstream Safety Manual. Operating and Maintenance Procedures and Reference Documents reside within OIMS system 6-1 (Operating and Maintenance Procedures) and are available for reference as required within PMET and UDOCS.

Reference the following list of Hebron and Hibernia OIMS 6-4 Safe Work Practices:

Abrasive Blasting
Management of Temporary Equipment Offshore
Guidance for use of Utility hoses and Tools

DocuSign Envelope ID: 39037C38-F68A-4933-A71A-3B6FD9071700

Joint Control Process
Welding Burning and Hot Cutting Operations
Electrical Safe Work Practices
Complex Lift
Working at Heights and Over the Side

Pyrophoric Material Management

DocuSign Envelope ID: 39037C38-F68A-4933-A71A-3B6FD9071700

# 5.0 Permit Pack Requirements Matrix

| Work/Job Activity | Permit Pack Requirements | | | | | |
|---|---|---|---|---|---|---|
| M Mandatory for permit pack<br>R To be reviewed and considered for Permit Pack by Permit Holder, Area Authority, and PIC. | Work Permit | Isolation • LOTO • Blinding • Defeat | Job Safety Analysis | SWP Checklist | Work Procedure ** | Atmospheric Test Record |
| **Hot Work** | M | R | M | M | R | M |
| **Confined Space** | M | M | M | M | R | M |
| **General Work** | M | R | M | R | R | R |
| **Critical Work:** | | | | | | |
| • Breaking Containment | M | M | M | M | R | R |
| • Critical Lift | M | R | M | M[1] | R | R |
| • Working at Heights | M | R | M | M | R | R |
| • Diving operations | M | R | M | M | R | R |
| • Excavation/Ground Disturbance | M | R | M | M | R | R |
| • High Risk Electrical | M | R | M | M[1] | R | R |
| • Abrasive Blasting | M | R | M | M[1] | R | R |
| • Spark Potential | M | R | M | R | R | M |
| • Working on Pressurized Systems | M | R | M | R | R | R |
| • Over-the-Side Work | M | R | M | R[1] | R | R |
| • Working in Exposed Locations | M | R | M | R | R | R |

- **M Mandatory for permit pack.**

  **M[1] indicates an EMCE SWP to be referenced in addition to the PBP SWP Checklist.**

- **R To be reviewed and considered for Permit Pack by Permit Holder, Area Authority, and PIC.**

  **Where applicable, Checklist should be attached to the Permit Pack. R[1] For EMCE specific SWP's, the SWP and the checklist should be reviewed for Permit Pack consideration by Permit Holder (PH), Area Authority (AA), and PIC.**

**** Where IC Procedure exist for the work activity they must be attached and available at the work site.**

DocuSign Envelope ID: 39037C38-F68A-4933-A71A-3B6FD9071700

**Permit Pack Required Documents:**

- ☐ Atmospheric Test Record
- ☐ Temporary Defeat
- ☐ Isolation Certificate
- ☒ JSA/THA
- ☐ Lifting Plan
- ☐ SDS
- ☐ P&ID/Drawing
- ☐ Normal Procedure
- ☐ IC Procedure
- ☐ Rescue Plan
- ☐ SWP Checklist
- ☐ SIMOP Deviation
- ☐ Work Aid

**Cross Referenced Certificates:**

| Type | Certificate/Permit Number(s) | |
|---|---|---|
| Isolation: | | |
| Temporary Defeat: | | |
| Work Permit(s): | | |
| | | |
| | | |

☐ List Required Checklists: _____

☐ Other (describe): _____

DocuSign Envelope ID: 39037C38-F68A-4933-A71A-3B6FD9071700

# 6.0 EMCE Functional Locks

**Functional locks** Functional locks are applied as follows:

- Functional locks are uniquely keyed and identifiable for each Function (for example, Mechanical, Electrical, Operations, Instrument, Contractor, other) by color, code, or type.
- Each group's Functional locks and keys must be kept in a secure box designated for this purpose. Each lock should have two keys; one key is kept in the cabinet and the other is issued with the lock. The Functional Supervisor for each group is responsible for issuing Functional locks and for keeping a log.
- Each Permit Holder performing work on isolated equipment must apply their Functional lock to the ICP before signing acceptance of the permit.
- Provision must be allowed for the application of personal locks by work team members upon request or where required by regulation.

DocuSign Envelope ID: 39037C38-F68A-4933-A71A-3B6FD9071700

**Red**
Control Lock
(Operations, Drilling, Services)

**Orange**
Mechanical

**Yellow**
Well Work / Other

**Purple**
Construction

**Blue**
Platform Services (Logistics)

**Black**
Electrical

**Green**
Instrumentation

**Brown**
Drilling

DocuSign Envelope ID: 39037C38-F68A-4933-A71A-3B6FD9071700

# 7.0 Life Saving Action (LSA)

DocuSign Envelope ID: 39037C38-F68A-4933-A71A-3B6FD9071700

**Life Saving Action (LSA)**

Overview: Life Saving Actions are key actions to prevent serious injuries during higher-risk activities. They provide globally-consistent actions to safely manage higher-risk activities. They describe the most important aspects of our Work Management System.

The primary focus is on managing exposures in activities at our work sites. Actions have been developed for common exposures across work sites.

- Work Authorization and Critical procedures are over-arching processes supporting the higher risk LSA Activities.
- The core LSA activities are the defined Higher-Risk Activities.

Note: All have established actions to be completed prior to and during work execution.

DocuSign Envelope ID: 39037C38-F68A-4933-A71A-3B6FD9071700

## Life Saving Action – Rotating Equipment

**Description**

Rotating hazards come from items such as rotary table, pipe spinners, pumps, motors, couplings, pulleys, cuttings augers, and agitators. The rotational energy can entrap hands and clothing, and cause significant injury. Winches can entangle body parts, clothing, and loosely carried safety lanyards into the draw works. Counter weights on mobile equipment and cranes are potentially hazardous rotating components.

**Actions**

Zero energy shall be verified before beginning equipment maintenance and an effective LOTO program shall be in effect. Guards shall be employed to prevent accidental contact. Utilization of appropriate safety tools such as JSA and Step Back 5X5 can be effective in addressing these hazards. An exclusion zone with proper signage should be established when barriers are not appropriate. Jammed / seized equipment with stored energy shall be de-energized and safely corrected.

Acceptable actions include, but are not limited to:

- Utilizing LOTO, working only after zero energy and properly authorized Permit-to-Work
- Operating with protective guards in place
- Ensuring that loose clothing, dangling harness/lanyard or jewelry is not worn

DocuSign Envelope ID: 39037C38-F68A-4933-A71A-3B6FD9071700

# 8.0 List of Work not requiring a Permit

DocuSign Envelope ID: 39037C38-F68A-4933-A71A-3B6FD9071700

| | |
|---|---|
| **Task not requiring PTW** | Although certain tasks have been identified as not normally requiring a PTW, workers are still responsible for conducting appropriate site evaluations, hazard identification and job planning, and in some instances, a Job Safety Analysis (JSA). Tasks that do not normally require a PTW include but are not limited to those listed on the following pages<br><br>Important – For these non –permitted activities, controls must be identified and hazards managed.<br><br>---------- |
| **Risk Assessment / Approval** | These activities must be assessed and mitigating controls documented using an appropriate risk assessment method selected by the risk screener and approved by the OIMS 6-4 Owner. Once approved this SWP will fulfill this requirement. Assets can utilize the EMCE approved non-permitted work list to make a specific list for their location. Ensure necessary Risk evaluations and WMS requirements are followed before adding or removing jobs. Asset specific lists are required to be endorsed by the Production Supervisor and approved by the Offshore Installation Manager / Plant Superintendent.<br><br>---------- |
| **Control of Activity** | The attached list outlines those discrete operations approved to be completed without a permit. These operations are considered lower risk and acceptable without the additional mitigation of a permit. In all cases a JSA and LMRA is required. In addition, the subject operation must be discussed at the Daily Work and Coordination Meeting (DWCM). Intrusive work, such as energy isolation (excluding personal isolations), breaking containment or bypassing safety controls are not included in this scope and are strictly prohibited without a permit. Full compliance with all Life Saving Actions is mandatory<br><br>When a JSA / LMRA is be utilized to control the work then the following actions must take place before the work can commence.<br><br>• JSA to be discussed at the DWCM if planned for the next day.<br>• JSA to be handed to the permit control desk so they are aware of the activity taking place and can control the work site.<br>• If moving to another work area using the same JSA, the permit control office must be informed.<br>• On completion of the activity the PTW office must be informed.<br>• On completion of the work update the JSA if required. |

DocuSign Envelope ID: 39037C38-F68A-4933-A71A-3B6FD9071700

## EMCE Non-Permitted Work Activities and Required Controls

| Ref # | Discipline | Non-Permitted Tasks | Breaking Contain-ment? | ICC Required? | Procedure, Work Aid or Checklist Required? | Control Process (JSA, etc.) |
|---|---|---|---|---|---|---|
| 1 | All | Calibrating and adjusting instruments (e.g. transmitter, temperature/pressure gauges, total flow, density device, OIW analyzer, storage silos,, well control, etc. (in which electronic wiring is not exposed to hazardous classified areas) | No | No | Yes | JSA/LMRA |
| 2 | All | Deck movement activities including containers, casing and tubulars, boxes, cylinder racks, drums and other consumables including use of wheeled carts (non-intrinsically safe forklift operations excluded) | No | No | No | JSA/LMRA |
| 3 | All | Nonintrusive maintenance to Junction Boxes | No | No | No | JSA/LMRA |
| 4 | All | General housekeeping and maintenance outside accommodations (e.g. deck cleaning, aerosol/brush painting, bulb replacement, pressure washing, manual snow removal, salt/sand treatment, etc.) | No | No | No | JSA/LMRA |
| 5 | All | General housekeeping and maintenance within accommodations/office (e.g. light bulb replacement, galley/quarters equipment maintenance, copy machine cleaning, minor plumbing repairs, etc.), excluding chemicals and equipment that require permit.<br><br>Galley and quarters equipment maintenance/repair (after electronically isolated and cooled down) including stoves, hot plates, coffee machines, water coolers, food display cases, TV/VCR, karaoke equipment, small appliances etc..<br><br>Quarters doors, toilets, water systems etc.. | No | No | No | JSA/LMRA |
| 6 | All | General repair shop work (lathe, grinding, use of electrical equipment, welding as per safe work practice) | No | No | No | JSA/LMRA |
| 7 | All | Installing flow coding / Process tags / Lamicoids /signs/ labels | No | No | No | JSA/LMRA |
| 8 | All | Helicopter operations (landing and takeoff, including jet fueling) | No | No | Yes | JSA/LMRA |

DocuSign Envelope ID: 39037C38-F68A-4933-A71A-3B6FD9071700

| Ref # | Discipline | Non-Permitted Tasks | Breaking Contain-ment? | ICC Required? | Procedure, Work Aid or Checklist Required? | Control Process (JSA, etc.) |
|---|---|---|---|---|---|---|
| 9 | All | Lubrication / Greasing to surface equipment and valves | No | No | Yes | JSA/LMRA |
| 10 | All | Weekly maintenance PMs and inspection on fire extinguisher, lifesaving equipment, and PPE. | No | No | Yes | JSA/LMRA |
| 11 | All | Replacing/Cleaning filters (low risk breaking containment) | Yes | No | No | JSA/LMRA |
| 12 | All | Sampling and testing of potable water | No | No | No | JSA/LMRA |
| 13 | All | Low pressure sampling of process and utility systems | No | No | No | JSA/LMRA |
| 14 | All | Use of non-intrinsically safe equipment (e.g. camera, laptop) | No | No | No | JSA/LMRA |
| 15 | All | Erect rigging equipment | No | No | No | JSA/LMRA |
| 16 | Maintenance | Cathodic system maintenance, measurement and monitoring activities outside for process areas (Intrinsically safe instruments only) | No | No | Yes | JSA/LMRA |
| 17 | Maintenance /Drilling | Visual panel inspection in a pressurized area (control panel, HVAC panel), less than 300 volts (higher risk) | No | No | No | JSA/LMRA |
| 18 | Maintenance | DCS System maintenance with minimal risk to process equip | No | No | Yes | JSA/LMRA |
| 19 | Maintenance | HVAC unit filter changes (no CSE) | No | No | Yes | JSA/LMRA |
| 20 | Maintenance /Drilling | Daily / Weekly / Monthly crane checks | No | No | Yes | JSA/LMRA |
| 21 | Maintenance | Transport breakers between LERS | No | No | No | JSA/LMRA |
| 22 | Maintenance | Temporary repairs to permanent insulation | No | No | No | JSA/LMRA |
| 23 | Maintenance / Operations | Wellhead Control Panel flushing -> Routine task | No | No | Yes | JSA/LMRA |
| 24 | Maintenance /Drilling | Lighting inspections , Emergency lighting battery test | No | No | Yes | JSA/LMRA |
| 25 | Maintenance /Drilling | Opening of junction boxes containing only intrinsically safe (IS) circuits. | No | No | Yes | JSA/LMRA |
| 26 | Maintenance | Filling of SCBA cylinders using non intrinsically safe air compressor | No | No | Yes | JSA/LMRA |
| 27 | Operations /Drilling | First line maintenance performed by Operator in accordance with appropriate procedures (operator rounds, lubrication, check oil level and refilling, visual inspection, sampling, changing filters) | No | No | Yes | JSA/LMRA |
| 28 | Drilling | First line maintenance performed by Drilling personnel in accordance with appropriate procedures (nemo pump, installing HP seal on HP riser, install | No | No | No | JSA/LMRA |

DocuSign Envelope ID: 39037C38-F68A-4933-A71A-3B6FD9071700

| Ref # | Discipline | Non-Permitted Tasks | Breaking Contain-ment? | ICC Required? | Procedure, Work Aid or Checklist Required? | Control Process (JSA, etc.) |
|---|---|---|---|---|---|---|
| | | centralizers, adjust limits on Gumbo chute valve, troubleshoot EFM/catwalk machine proximity switch, clean strainers on low pressure mud systems, etc.) | | | | |
| 29 | Drilling | Use of air tools in all areas outside of process modules (e.g. impact wrench, impact gun) | No | No | No | JSA/LMRA |
| 30 | Drilling MI Swaco | Using automated internal tank cleaning system (rotating sprinkler head) | No | No | Yes | JSA/LMRA |
| 31 | Drilling | Use of BOP Crane for noncritical lifts | No | No | Yes | JSA/LMRA |
| 32 | Drilling | Slip and Cut Drill Line. ~~Use of air tools.~~ | No | No | No | JSA/LMRA |
| 33 | Drilling | Non-intrusive checks for rotation and current | No | No | No | JSA/LMRA |
| 34 | Drilling / Hebron | General use of mobile lift | No | No | No | JSA/LMRA |
| 35 | Drilling | Cleaning low pressure Mud Pump Suction Screens.<br>Note: #83 states 'Cleaning strainers on CRI -> General Activity'<br>*Consider Personal Isolation/ Operator Standby | No | Yes | Yes | JSA/LMRA |
| 36 | Drilling Maint | Check and adjust Drawworks Brakes.<br>Note: ICC –> Drilling can discuss further with Production<br>*Personal Isolation/ Operator Standby | No | Yes | Yes | JSA/LMRA |
| 37 | Drilling | Change out valve on top of manual hopper on Low pressure system.<br>Note: ICC<br>*Consider personal Isolation/ Operator Standby | No | Yes | Yes | JSA/LMRA |
| 38 | Drilling | Cleaning Trip Tank. (Vented, not CSE) | No | No | No | JSA/LMRA |
| 39 | Drilling | Repair and Test the Casing Tong | No | No | Yes | JSA/LMRA |
| 40 | All | Weekly lifeboat PMs | No | No | Yes | JSA/LMRA |

DocuSign Envelope ID: 39037C38-F68A-4933-A71A-3B6FD9071700

# 9.0 List of Tasks performed using a Personal Isolation

DocuSign Envelope ID: 39037C38-F68A-4933-A71A-3B6FD9071700

**Personal isolation**

Personal Isolations can be performed for lower risk, short duration tasks such as

- taking samples
- isolating instruments
- replacing pressure gauges
- replacing small filter cartridges or small valves
- small lighting circuit checks / lamp replacements

**Control of activity**

The personal isolation must provide care, custody and control of the equipment to the person conducting the work (Permit Holder). Isolations will typically be visible to the PH (adjacent to the work face). If a point is not visible, the isolation point locked and tagged with a functional lock and key and will be retained by the PH.

**Personal isolation criteria**

The criteria to meet for personal isolation is as follows :

- Before approval the AA or designate must be satisfied with the competence of the person conducting the work to execute the isolation and to complete the task safely. The AA can request the AO to assist with the isolation if required.
- De/-Isolation takes place immediately after the task has been completed.
- An ICC is not required if the task is completed before the end of shift. An ICC must be processed if not completed by the end of the shift
- The person conducting the work may receive assistance from others but the person must be present at all times while the work is in progress
- The person conducting the work must confirm zero energy and demonstrate zero energy to anyone assisting with the work.
- If the work site has to be left unattended during the shift, the equipment will be isolated, locked and tagged. ( Made Safe)
- During permit close out, the AO must confirm that the isolation points are returned to the normal state.

DocuSign Envelope ID: 39037C38-F68A-4933-A71A-3B6FD9071700

# Approved Personal Isolation List

| | |
|---|---|
| **Operations** | |
| | Taking normal / routine oil and water samples from designated (engineered) sampling points |
| | Stroking of valves for maintenance checks (no breaking containment) |
| | Changing suction filters |
| | Routine running of diesel generators |
| | Deluge testing (short duration) |
| **Instrumentation** | |
| | Instrumentation local isolations for transmitters, gauges, switches, troubleshooting, calibration & function testing. |
| | Repair of I.S. instruments / Troubleshoot LV circuits |
| | Remove /Repair Instrument tubing |
| **Electrical** | |
| | Testing/Troubleshooting of electrical equipment (LV circuits) |
| | Lighting Repairs |
| | Elevator troubleshooting / maintenance |
| | Testing/troubleshooting of heat trace and associated equipment |
| **Mechanical** | |
| | Maintenance / Routine trouble shooting of equipment, filter changes, hydraulic systems (non-intrusive), small pump oil changes. |
| | Greasing valves /machinery (non-intrusive) |
| | Fire main and hydrant work of short duration. |
| | Air operated overhead crane maintenance |
| | Air operated door maintenance |
| **All Departments** | |
| | HVAC - first line maintenance checks, Visual ( Does not include equipment strip down or belt replacement) |
| | Minor repairs to galley equipment |
| **Drilling** | |
| | Replacing hoses or O-rings at deck level |
| | Inspect/adjust/grease draw works brakes. |
| | Troubleshoot PHM, PLS /EFM to obtain pressure readings or reset speed control or counterbalance cartridges. |

DocuSign Envelope ID: 39037C38-F68A-4933-A71A-3B6FD9071700

| | |
|---|---|
| | Troubleshoot VPH / IR /CWM / MB /Catheads RT /Mousehole |

DocuSign Envelope ID: 39037C38-F68A-4933-A71A-3B6FD9071700

# 10.0 List of Low Risk Single Valve Isolations

Note: Single Valve Isolations are allowed for lower risk activities and for equipment engineered for a specific purpose where a procedure exists such as installing and/or removing blinds and plugs, sampling, on-line PSV testing, isolating instrumentation, replacing pressure gauges, pig senders and receivers, Senior Daniel Orifice Meter changes and well head stuffing boxes.

As part of operationalizing the SBV interim directive issued by Upstream Operations, it was encouraged that PUs assess Lower Risk SBV activities and document in their Appendix A of their WMS Manual

EMCE has assessed the Lower Risk SBV activities for the Hibernia and Hebron Assets below, which are provided in the lists below:

**Hebron Platform:**

| System Description | Isolation | Rationale for SBV Isolation |
|---|---|---|
| Minox / Water Injection | Minox Train boundary isolation | SBV on inlet and outlet without isolating all water injection filters |
| Fire Water System | Fire Water Equipment<br>Foam Pumps/Equipment<br>Deluge Zones | Water service - would have to take down large part of the ring main |
| Seawater system | Seawater Booster Pump and Strainer | Only SBV available without taking out other equipment |
| Seawater system | Standby / Main Seawater Filters | Only SBV available without taking out other equipment |
| Seawater system | SWL Pumps | Only SBV available without taking out other equipment |
| Seawater Treatment System | Electrolyzes<br>Hypochlorite pumps | Hypochlorite outage to obtain double block |
| Sewage Treatment | Macerator | Would need to take down full treatment - sys service |
| Diesel Fuel System | Diesel Centrifuge Inlet Strainers | Only SBV available without taking out other equipment |

DocuSign Envelope ID: 39037C38-F68A-4933-A71A-3B6FD9071700

| | | |
|---|---|---|
| Diesel Fuel System | Treated Diesel Tanks | SDV is used on inlet or outlet; DBV further upstream and downstream however would isolated centrifuge discharge to both tanks and both treated pumps |
| Diesel Fuel System | Centrifuge disc stack | DBB on inlet but not on outlet |
| Diesel Fuel System | Raw Diesel Strainers | DBV on inlet / outlet; SBV to drains |
| Scale Paraffin Inhibitor | SBV on returns to chem tanks (PSV's and Drains) and blanket gas N2 - DBV req for suction and discharge | Both pumps require isolation to obtain double block |
| Demulsifiers | SBV on returns to chem tanks (PSV's and Drains) and blanket gas N2 - DBV req for suction and discharge | Both pumps require isolation to obtain double block |
| Cooling Medium / Heating Medium | Level Bridle Isolations on Expansion tank | Only SBV available |
| Cooling Medium / Heating Medium | HM / CM Cartridge Filters | Only SBV available |
| Cooling Medium / Heating Medium | WHRU A/B/C | Only SBV available |
| Cooling Medium / Heating Medium | HM Pumps | SBV on outlet MOV; drains |
| Cooling Medium / Heating Medium | CM Pumps | SBV on outlet MOV; drains |
| Cooling Medium / Heating Medium | Dilute TEG Pumps | Only SBV available |
| Cooling Medium / Heating Medium | HM Trim Heaters | Only SBV available |
| Cooling Medium / Heating Medium | MP Heaters | SBV on inlet |
| Cooling Medium / Heating Medium | LP Heaters | SBV on inlet |
| Cooling Medium / Heating Medium | PSV<br>Control valves | SBV only |
| Instrument Air | Compressor Cooling Medium Pumps | Only SBV available |

DocuSign Envelope ID: 39037C38-F68A-4933-A71A-3B6FD9071700

| | | |
|---|---|---|
| Instrument Air | Air Compressor Outlets | Only SBV available |
| Instrument Air | Air Dryer Package Maintenance | Can get DBB on inlet but not on outlet |
| Instrument Air | Air Dryer Filters | Only SBV available |
| Instrument Air | Utility Air Header isolations | Only SBV available |
| Instrument Air | Control Valves | Only SBV available |
| Utility Air Systems | Control Valves | Only SBV available |
| Seawater system | Seawater supply/cooling for users | Only SBV available |
| Nitrogen Generation Package | Nitrogen Compressor Changeout | SBV available only on inlet / outlet |
| Nitrogen Generation Package | Nitrogen Membrane Changeout | (future once isolation valves are installed) |
| Nitrogen Generation Package | Blanket gas Control valves | SBV only |
| Fresh and Potable Water | RO Water Maker Prefilter Changeout | Only SBV available |
| Fresh and Potable Water | Freshwater Pumps | Only SBV available |
| Fresh and Potable Water | Potable Water Pumps | Only SBV available |
| Fresh and Potable Water | Control valves | Only SBV available |
| Fresh and Potable Water | Domestic Hot Water Tanks | Only SBV available |
| Fresh and Potable Water | Tempered Water Skids | Only SBV available |
| Fresh and Potable Water | RO water Maker A/B Control valves | Only SBV available |
| Utility and Process Open Drains | Drains System pumps | Both pumps require isolation to obtain double block |
| Utility and Process Open Drains | Process Drains Strainer | SBV on inlet, outlet and bypass |
| Utility and Process Open Drains | Utility Drains Strainer | SBV on inlet, outlet and bypass |
| Utility and Process Open Drains | Drains Centrifuge | SBV on inlet and outlet |
| **Drilling** | | |
| Mud System | Mud pump lube oil duplex filters | |

DocuSign Envelope ID: 39037C38-F68A-4933-A71A-3B6FD9071700

| | | |
|---|---|---|
| Knuckleboom Crane | Return and case drain filters | |
| Flare / Closed Drains | Drain valves and PSV downstream flare isolations | |
| BOP Control Unit | Hydraulic pressure filters | |
| LP Mud System | Mix and Transfer Pumps | |
| LP Mud System | Mud Mixing System – Additives and Mud Supply | |
| LP Mud System | Trip Tank Pumps | |
| Solids Control System | Settling Pit Pumps, Shakers, Degasser | |
| HP Mud System | Mud Pumps | |
| HP Mud System | C/K Manifold | |
| HP Mud System | Mud and Standpipe Manifolds | |
| Gravel Pack System | LAS Pumps and Piping | |
| Gravel Pack System | HP GPK Pumps and Manifolds | |
| Gravel Pack System | Brine Pumps | |
| Gravel Pack System | Gel Pumps | |
| Gravel Pack System | Blender | |
| Gravel Pack System | Mountain Movers | |
| Gravel Pack System | Hydraulic Power Supply | |

DocuSign Envelope ID: 39037C38-F68A-4933-A71A-3B6FD9071700

| | |
|---|---|
| CRI System | HP Pumps 1 and 2 |
| CRI System | Pre-slurry Pumps |
| CRI System | Coarse / Fines / Holding Tank Pumps |
| CRI System | Solids Control – Shakers and Grinder |
| Drains Treatment System | Decanter Centrifuge and Feed Pumps |
| Drains Treatment System | Disc Stack Centrifuge and Feed Pumps |
| Drains Treatment System | Drains Collection Tanks and Pumps |
| Offline Mud Cleaning System | OMC Shaker and Centrifuge and supply pumps |
| Cement Unit | Cement Pumps and Manifolds |
| Cement Unit | LAS System |
| Cement Unit | Mix Water and Cement Supply |
| Drillwater System | Drillwater Supply Pumps and Piping |
| Base Oil System | Base Oil Supply Pumps and Piping |

DocuSign Envelope ID: 39037C38-F68A-4933-A71A-3B6FD9071700

| | |
|---|---|
| BOP Control System | BOP Accumulators |
| BOP Control System | Accumulator Charge Pumps and Piping |
| Hydraulic Systems | Wellwork Hydraulic Supply |
| Hydraulic Systems | Wellwork Maintenance Basket |
| Hydraulic Systems | DES Hydraulic Supply |
| Hydraulic Systems | DES Equipment – VPH, CWM, JIM-10, etc. |

**Hibernia Platform:**

**OPERATIONS**

**M10**

**M11**

| |
|---|
| Hazardous Drains Tank Oil Side Filters (M-5603) |
| Hazardous Drain Tank Water Side Filters (M-5601) |
| Produced Water Reject Oil Pump Strainers (G-4207 A/B/C) |
| Seal Flush Line Removal (G-4207 A/B/C) |
| G4205 Degasser Pumps (G-4208 A/B) |
| Seal Flush Line Removal (G-4208 A/B) |

DocuSign Envelope ID: 39037C38-F68A-4933-A71A-3B6FD9071700

| |
|---|
| G4207 Degasser Pumps (G-4209 A/B/C) |
| Seal Flush Line Removal (G-4209 A/B/C) |
| Process Centrifuge (M-5601 A/B) |

**M12**

| |
|---|
| Water Clarifier Pumps (G-6727A/B) |
| Acid Pump (G-6710) |
| THPS Pump ((G-6722B) |
| Asphaltene Inhibitor Pump (G-6722A) |
| Scale Inhibitor Pumps (G-6725A/B) |

**M14**

| |
|---|
| Demulsifier Pumps (G-6712 & G-6708) |
| Antifoam Pump (G-6729) |
| Corrosion Inhibitor Pumps (G-6730A/B) |
| Seal oil pumps for Gas Compressor Auxiliary Systems (G-3303A/B/C/D) |
| Lube oil pumps for Gas Compressor Auxiliary Systems (G-3302A/B/C/D) |
| PCHE cooling medium strainers (M-6401) |

**M15**

| |
|---|
| Turbine Lube Oil Filters (M33102A/B – M33202A/B) |
| Hydraulic Control Oil Filters (M33111A/B – M33211A/B) |

DocuSign Envelope ID: 39037C38-F68A-4933-A71A-3B6FD9071700

| |
|---|
| Scavenge Oil Filters (M33101A/B – M33201A/B) |
| 1st Stage Lube Oil Filters (M3320A/B) |

**M20**

**M21**

| |
|---|
| Hydraulic Power Unit Filters |

**M30**

**M31**

| |
|---|
| Diesel Bunkering Filter (M6102) |
| Water Injection Lube Oil Filter |

**M32**

| |
|---|
| Biocide Pump (G-6703) |
| Oxygen Scavenger Pump (G-6701) |
| H2S Scavenger Pump (G-6721) |

**M35**

| |
|---|
| Fresh Water Strainers (FM4601) |

**M40**

**M42**

| |
|---|
| Pot Water Coarse Filter (D-4801) |
| Pot Water Fine Filters |

DocuSign Envelope ID: 39037C38-F68A-4933-A71A-3B6FD9071700

| |
|---|
| Diesel Sock Filters (M-6101A/B) |
| Treated Diesel Pumps (G-6102A/B) |

**M43**

| |
|---|
| Air Compressors (K6601A/B/C/D)' |
| Air Dryers (Z6602) |
| Diesel Centrifuge (M-6101A/B) |
| Strainers (M-6104) |
| Pumps (G-6101A/B) |

**M45**

| |
|---|
| Turbine Lube Oil Filters |
| Hydraulic Control Oil Filters |
| Turbine Lube Oil Filters |
| Turbine Diesel Filters |

**M50**

| |
|---|
| Fire Hydrants (Platform Wide) |
| Sprinkler Heads (M40/M50) |

**U-Shaft**

| |
|---|
| Service Water Pump Suction Strainers (G-4401 A/B/C) |
| Sea Water Pump Suction Strainers (G-4101 A/B/C) |
| Ballast Water Suction Strainers (G-4701 A/B/C) |

**Construction**

DocuSign Envelope ID: 39037C38-F68A-4933-A71A-3B6FD9071700

| |
|---|
| Utility Systems. |
| Flare Tie-ins (for example when Working Gas Lift Flow Lines). |
| Open Drains (Installing Isolation Plug in Drain Box Nozzle). |
| Calibration on transmitters |
| Troubleshooting a control valves |
| Maintenance on WCM |

**Maintenance**

| | | | |
|---|---|---|---|
| Pneumatic doors | | | |
| Pneumatic Hoists – M45 Shop, R shaft and U shaft | | | |
| Strainers: Ballast, sea, service, Haz Drains – oil and water side | | | |
| Filters: Pot Water, MPG Diesel | | | |
| TAG Loc Service | | | |
| 72-LIT -1401 | M51 | RADIATOR(E-7201A) WATER | Rosemount |
| 72-LIT -2401 | M51 | RADIATOR(E-7201B) WATER | Rosemount |
| 72-LIT -3401 | M51 | RADIATOR(E-7201C) WATER | Rosemount |
| 72-LIT -4401 | M51 | RADIATOR(E-7201D) WATER | Rosemount |
| 72-LIT -5401 | M51 | RADIATOR(E-7201E) WATER | Rosemount |
| 43-LIT -7032 | M34 | DEAERATOR (C-4301) VESSEL HIGH HIGH LEVEL ALARM | Rosemount |
| 43-LIT -7037 | M33 | DEAERATOR (C-4301) VESSEL LOW LOW LEVEL ALARM | Rosemount |

DocuSign Envelope ID: 39037C38-F68A-4933-A71A-3B6FD9071700

| | | | |
|---|---|---|---|
| 43-LIT -7022 | M33 | DEAERATOR (C-4301) VESSEL LEVEL CONTROL | Rosemount |
| 46-LIT -1041 | M36 | FRESH WATER STORAGE TANK(F-4601A) | Rosemount |
| 46-LIT -1042 | M36 | FRESH WATER STORAGE TANK(F-4601B) | Rosemount |
| 61-LIT -0005 | M47 | RAW DIESEL OIL STORAGE TANK (F-6101A) | Rosemount |
| 61-LIT -0009 | M37 | RAW DIESEL OIL STORAGE TANK (F-6101B) | Rosemount |
| 61-LIT -0041-A | M42 | TREATED DEISEL STORAGE TANK(F-6102A) | Rosemount |
| 61-LIT -0041-B | M42 | TREATED DEISEL STORAGE TANK(F-6102B) | Rosemount |
| 61-LIT -0061 | M47 | RAW DIESEL OIL STORAGE TANK (F-6101A) | Rosemount |
| 61-LIT -0064 | M37 | RAW DIESEL OIL STORAGE TANK (F-6101B) | Rosemount |
| 61-LIT -0421 | M47 | RAW DIESEL OIL STORAGE TANK (F-6101A) | Rosemount |
| 61-LIT -0424 | M37 | RAW DIESEL OIL STORAGE TANK (F-6101B) | Rosemount |
| 63-LIT -0161 | M31 | HEATING MEDIUM MAKE-UP SUMP(F-6301) | Rosemount |
| 69-LIT -2203 | M58 | HVAC/LQ HEATING MEDIUM ESPANSION DRUM(D-6901) | Rosemount |
| 83-LIT -2130 | M47 | AFFF TANK(F-8302A) | Rosemount |
| 83-LIT -2133 | M47 | AFFF TANK(F-8302B) | Rosemount |
| 67-LIT -1195 | M31 | HYDROGEN RELEASE TANK(F-6731) | Rosemount |
| 31-LIT -7313 | M14 | HP SEPARATOR TANK(D-3101) | Rosemount |
| 31-LIT -7327 | M14 | HP SEPARATOR TANK(D-3101) | Rosemount |

DocuSign Envelope ID: 39037C38-F68A-4933-A71A-3B6FD9071700

| | | | |
|---|---|---|---|
| 31-LIT -7332 | M14 | HP SEPARATOR TANK(D-3101) | Rosemount |
| 42-LIT -0054 | M11 | PRODUCED WATER SURGE DRUM(D-4206) | Rosemount |
| 42-LIT -0080 | M11 | PRODUCED WATER DEGASSER DRUM(D-4205) | Rosemount |
| 42-LIT -0082 | M11 | PRODUCED WATER DEGASSER DRUM(D-4205) | Rosemount |
| 31-LIT -7343 | M12 | MP SEPARATOR(D-3102) TANK | Rosemount |
| 31-LIT -7360 | M12 | MP SEPARATOR (D-3102) TANK | Rosemount |
| 31-LIT -7367 | M12 | MP SEPARATOR (D-3102) TANK | Rosemount |
| 31-LIT -7414 | M14 | LP SEPARATOR TANK (D-3103) | Rosemount |
| 31-LIT -7418 | M14 | LP SEPARATOR TANK(D-3103) | Rosemount |
| 48-LIT -0159 | M41 | POTABLE WATER STORAGE TANK No.2(F-4802) | Rosemount |
| 48-LIT -0184 | M42 | POTABLE WATER STORAGE TANK No.1(F-4801) | Rosemount |
| 61-LIT -0006 | M44 | RAW DIESEL OIL STORAGE TANK (F-6101A) | Rosemount |
| 61-LIT -0010 | M34 | RAW DIESEL OIL STORAGE TANK (F-6101B) | Rosemount |
| 63-LIT -0158 | M17 | HEATING MEDIUM EXPANSION DRUM(D-6301) | Rosemount |
| 64-LIT -0116 | M17 | COOLING MEDIUM EXPANSION DRUM(D-6401) | Rosemount |
| 64-LIT -0123 | M17 | COOLING MEDIUM EXPANSION DRUM(D-6401) | Rosemount |
| 46-LIT -1005 | M33 | FRESH WATER STORAGE TANK(F-4601A) | Rosemount |
| 46-LIT -1008 | M33 | FRESH WATER STORAGE TANK(F-4601B) | Rosemount |

DocuSign Envelope ID: 39037C38-F68A-4933-A71A-3B6FD9071700

| | | | |
|---|---|---|---|
| J31001 | M22.5 | Baker Wellhead Panel East | Baker |
| J31002 | M22.5 | Baker Wellhead Panel East | Baker |
| J31003 | M22.5 | Baker Wellhead Panel West | Baker |
| J31004 | M22.5 | Baker Wellhead Panel West | Baker |
| J31005 | M22 | Baker Wellhead Panel West | Baker |
| J310016 | M22 | Baker Wellhead Panel East | Baker |
| J31013 | M22 | Baker Wellhead Panel East | Baker |
| J31014 | M31 | Baker Wellhead Panel West | Baker |

| | | |
|---|---|---|
| Z-6501 | M11 | Hydraulic Skid |
| Z-6520 | M31 | Hydraulic Skid |
| Z-6581 | U-09 | Hydraulic Skid |
| Z-6510 | M31 | Hydraulic Skid |
| Accommodations - M-50 - All Plumbing within Accommodations | | |
| | | |

**Drilling**

| |
|---|
| BOP Cranes Q-1705C East, Q-1705A West, Q-1705B Center |
| BOP HPU Z-1701 |
| BOP Accumulator Z-0915 East, Z-0912 West |

DocuSign Envelope ID: 39037C38-F68A-4933-A71A-3B6FD9071700

| |
|---|
| DWKS Z-1704 East, Z-1703 West |
| EFM Z-1724 East, Z-1725 West |
| HP Wash Units Z-4905 East, Z-4906 West, Z-1411 M-33 |
| HPU Z-1410 East, Z-1411 East, Z-1401 West |
| Mud Pump 1 G-0802A East, G-0801A West |
| Mud Pump 2 G-0802B East, G-0801B West |
| Mud Pump 3 G-0802C East, G-0801C West |
| Mix Pumps G-0604A/B/C East, G-0601A/B/C West |
| Pre Charge Pumps G-0606A/B/C/D East, G-0603A/B/C/D West |
| TDS/DWKS Cooling Skid Z-1602 East, Z-1601 West |
| PHM Z-1416 East, Z-1407 West |
| PLS Z-1720 East, Z-1721 West |
| Shakers M-0743A/B/C/D/E East, M-0748A/B/C/D/E West |
| Top Drive Z-1708 East, Z-1707 West |
| Retract M-1410A/B East, M-1409A/B West |
| PS 21 Slips M-17050A East, M-17050B West |
| M-1727 Racking Board Winch |
| M-1416 Winch, Manrider |

DocuSign Envelope ID: 39037C38-F68A-4933-A71A-3B6FD9071700

| | |
|---|---|
| Q-1714 | Winch 5 ton Derrick Jib Boom |
| M-1404A | Winch, Hydraulic |
| M-1404B | Winch, Hydraulic |
| M-1405A | Winch, Hydraulic |
| M-1405B | Winch, Hydraulic |
| M-1405C | Winch, Hydraulic |
| M-1406A | Cathead Hydraulic |
| M-1406B | Cathead Hydraulic |
| M-1726 | Racking Board Winch |
| M-1415 | Winch, Manrider |
| Q-1713 | Winch 5 ton Derrick Jib Boom |
| M-1401A | Winch, Hydraulic |
| M-1401B | Winch, Hydraulic |
| M-1402A | Winch, Hydraulic |
| M-1402B | Winch, Hydraulic |
| M-1402C | Winch, Hydraulic |
| M-1403A | Cathead Hydraulic |
| M-1403B | Cathead Hydraulic |

DocuSign Envelope ID: 39037C38-F68A-4933-A71A-3B6FD9071700

| | |
|---|---|
| M-1408A | Winch BOP Hydraulic |
| M-1408B | Winch BOP Hydraulic |
| M-1407A | Winch BOP Hydraulic |
| M-1407B | Winch BOP Hydraulic |

DocuSign Envelope ID: 39037C38-F68A-4933-A71A-3B6FD9071700

## 11.0 Quick Reference Guide – Gas/Norm Testing and Respiratory Protection Requirements.

| Parameter | | Requirement for no RPE* | Limit Basis and Rationale | Measurement Device | Additional Considerations |
|---|---|---|---|---|---|
| Lower Explosive Limit<br>- General work<br>- Hot work | LEL | <br><br>≤1%<br>0% | Work Management System | Industrial Scientific Ventis Pro | • Four head personal monitor.<br>• Bump test daily. |
| Hydrogen Sulfide | H2S | <5ppm instantaneous<br><br><1ppm 15 minute average | Low alarm: 5 ppm (instantaneous reading)<br><br>STEL alarm 1 ppm (15 minute average) | | |
| Carbon Monoxide | CO | < 12ppm | Low alarm set point 12-hour OEL | | |
| Oxygen | O2 | ≥19.5% to ≤ 23.0% | Work Management System | | |
| Total Hydrocarbons or Volatile Organic Carbons | THC or VOC | <50 ppm | 12-hour OEL | Ultra Rae 3000 | • Operating temperature -20°C to 45°C and continuous sampling.<br>• Calibration by Instrument Tech daily before use. |
| Benzene | Bz or C6H6 | <0.25 ppm | 12-hour OEL | Ultra Rae 3000 | • Benzene tube is required.<br>• Operating temp +2°C to 40°C<br>• Draw time 90 sec. for summer and 211 sec for winter.<br>• If no VOC's… no Benzene.<br>• LEL of 0% and VOC's > 1000 ppm, ventilate space until levels are below 1000 ppm.<br>• LEL of 0% and VOC's < 1000 ppm, monitor for Benzene.<br>• Calibration by Instrument Tech. daily before use. |
| Naturally Occurring Radioactive Material | NORM | <200 cpm | Canadian NORM Guidelines – Threshold to be classified as "NORM Contaminated" | Tracerco 201 or 407 | • Bump test each day against Cs137 source. |

***If levels exceed the "Requirement for no RPE" – Immediately leave the area and contact your supervisor. Consult the respiratory protection requirements on the flipside prior to re-entry into the area.**

DocuSign Envelope ID: 39037C38-F68A-4933-A71A-3B6FD9071700

| Parameter | | Measurement Range | Minimum Respiratory Protection | Cartridge |
|---|---|---|---|---|
| Lower Explosive Limit | LEL | <1% | Not Required | NA |
| | | ≥1 but <10%** | Supplied Air | NA |
| Hydrogen Sulfide | H2S | <1ppm (15-minute average)<br><5ppm (instantaneous) | Not required | NA |
| | | ≥1ppm (15-minute average)<br>≥5ppm (instantaneous) | Supplied air | |
| Carbon Monoxide | CO | <12 ppm | Not required | NA |
| | | ≥12ppm | Supplied air | |
| Oxygen | O2 | < 19.5% or | Supplied air | NA |
| | | > 23.0% | No entry | |
| Volatile Organic Carbons | VOC | <50 ppm | Not Required | NA |
| | | ≥50 but <500 ppm | Half-face APR | OV |
| | | ≥500 but <1000ppm | Full-face APR | OV |
| | | ≥1000ppm | Supplied Air | NA |
| Benzene | Bz or C6H6 | <0.25 ppm | Not Required | NA |
| | | ≥0.25but <2.5 ppm | Half-face APR | OV or OV/AG |
| | | ≥2.5 but < 12.5 ppm | Full-face APR | OV or OV/AG |
| | | ≥12.5 ppm | Supplied Air | NA |
| Naturally Occurring Radioactive Material | NORM | <200cpm | Not Required | NA |
| | | ≥200 but < 1500 cpm | Half- face APR | P100 |
| | | ≥1500cpm | Full-face APR | P100 |

**APR – Air Purifying Respirator**
**OV- Organic Vapor**
**OV/AG – Organic Vapor & Acid Gas Combination**
**P100 – filters at least 99.97% of airborne particles and is strongly resistant to oil**
**NA – Not Applicable**

DocuSign Envelope ID: 39037C38-F68A-4933-A71A-3B6FD9071700

## 13.0 Confined Space Entry Class Determination

***VALUES ARE BASED ON THE 12-HOUR ACGIH OCCUPATIONAL EXPOSURE LIMITS**

**Class 1** – Entry without use of Respiratory Protection Equipment (RPE)

**Class 2** – Entry where RPE is needed

Confined Space Entry class is determined by atmospheric measurements inside the confined space

•**Oxygen (O2**) content/level inside space: An oxygen reading of other than ~ 20.9 percent should be investigated and understood. Entry is not allowed for oxygen content above 23.5 percent. (Oxygen enrichment).

•**Flammability** of gases present:

•**Air contaminants, toxic gases or vapors**, like H2S, CO:

- **WARNING: Entry into atmospheres above the class 2 limits MUST NOT be conducted**
- **IMPORTANT: THE Confined Space Entry class determination table does not consider any possibility of NORM within the confined space. Presence of NORM may require the use of respiratory protection, particularly if disturbed.**

| | **Class 1 CSE** | **Class 2 CSE** | **Class 2 CSE** | **Class 2 CSE** | |
|---|---|---|---|---|---|
| **Type of Gas** | Entry Allowed **WITHOUT** Respiratory Protection | Entry Allowed **WITH** Respiratory Protection **½ mask [1]APR with [2]OV/AG+[3]P100 combo** | Entry Allowed **WITH** Respiratory Protection **Full Face APR with OV/AG+P100 combo** | Entry Allowed **WITH** Respiratory Protection **Supplied Air** | **IDLH Value** |
| | **Atmospheric Concentration** | **Atmospheric Concentration** | **Atmospheric Concentration** | **Atmospheric Concentration** | |
| **Oxygen** ***based on Upstream Safety Manual*** | ≥ 19.5% to ≤ 23.5% | ≥ 19.5% to ≤ 23.5% | ≥ 19.5% to ≤ 23.5% | >16% to 23.4% Not permitted if > 23.5% | / |
| **Flammability: Non-Hot Work** ***based on Upstream Safety Manual*** | 0% of LEL (HC) | 0% of LEL (HC) | 0% of LEL (HC) | >1 but <10% of LEL (HC) | / |
| **Flammability: Hot Work** | 0% of LEL (HC) | 0% of LEL (HC) | 0% of LEL (HC) | 0% of LEL (HC) | / |
| **Volatile Organic Compounds (VOC)** ***10.6 eV Lamp*** | <10ppm | >10 to < 100 ppm | >100 to <500 ppm | >500 ppm or unknown | / |
| **Benzene** ***Based on ACGIH 12-hr OEL*** | <0.25 ppm | >0.25 - <2.5 ppm | >2.5 - <12.5 ppm | >12.5 to <500 ppm | 500 ppm |
| **$H_2S$** ***Based on ACGIH 12-hr OEL*** | <0.5 ppm | Not Permitted | Not Permitted | >0.5 to <100 ppm | 100 ppm |
| **$SO_2$** ***Based on ACGIH [4]STEL*** | < 0.25 ppm | >0.25 - <2.5 ppm | >2.5 - <12.5 ppm | >12.5 to < 100 ppm | 100 ppm |
| **$CO_2$** ***Based on ACGIH 12-hr OEL*** | < 2500 ppm | Not Permitted | Not Permitted | >2500 to < 40,000 ppm | 40,000 ppm |
| **CO** ***Based on ACGIH 12-hr OEL*** | < 12 ppm | Not Permitted | Not Permitted | >12 to < 1200 ppm | 1200 ppm |

[1] APR – Air Purifying Respirator

[2] OV/AG– Organic Vapor & Acid Gas Combination

[3] P100 – filters at least 99.97% of airborne particles and is strongly resistant to oil

STEL – 15 minute Short Term Exposure Limit

DocuSign Envelope ID: 39037C38-F68A-4933-A71A-3B6FD9071700

# 14.0 Interim Approvals

Interim changes (Management of Change) to this Appendix A must be approved by the Sys 6-4 Administrator and Owner. They will be recorded using a Decision Record form which will be forwarded to the document control for QA/QC and assigned document number. The Decision Record form will then go to System 6-4 Admin and Owner for endorsement and approval. Note: A scanned copy of the signed Decision Record form will be placed in SharePoint; and sent to all WMS manual holders.

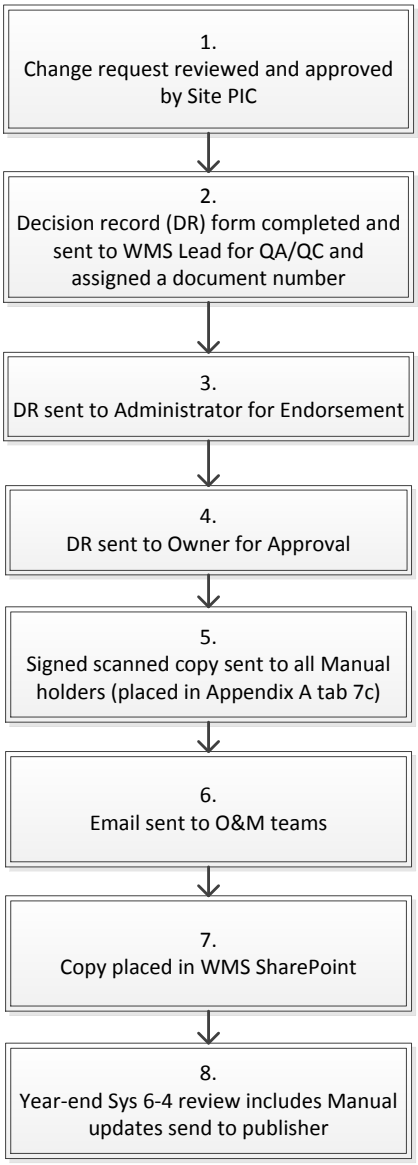

## Certificate Of Completion

Envelope Id: 39037C38F68A4933A71A3B6FD9071700
Status: Completed
Subject: Please DocuSign: Appendix A Revision 2020.docx
Source Envelope:
Document Pages: 68
Signatures: 7
Envelope Originator:
Certificate Pages: 4
Initials: 0
[redacted]
AutoNav: Enabled
Address Redacted
EnvelopeId Stamping: Enabled
[redacted]
Time Zone: (UTC-06:00) Central Time (US & Canada)

## Record Tracking

Status: Original
12/3/2020 11:08:44 AM
Holder: [redacted]
Location: DocuSign
Security Appliance Status: Connected
Pool: Main SecApp 1

| Signer Events | Signature | Timestamp |
|---|---|---|
| [redacted]<br>ExxonMobil<br>Security Level: Email, Account Authentication (None)<br><br>**Electronic Record and Signature Disclosure:**<br>Accepted: 5/19/2020 6:45:37 AM<br>ID: d76fc869-87e0-4d26-9a12-0bf686dbd208<br>Company Name: Exxon Mobil Corporation | [redacted]<br>Signature Adoption: Pre-selected Style<br>Using IP Address: 158.26.65.167 | Sent: 12/3/2020 11:15:27 AM<br>Viewed: 12/9/2020 4:32:01 PM<br>Signed: 12/9/2020 5:12:19 PM |
| [redacted]<br>ExxonMobil General<br>Security Level: Email, Account Authentication (None)<br><br>**Electronic Record and Signature Disclosure:**<br>Accepted: 9/25/2020 9:32:30 AM<br>ID: 70223f61-37eb-4a2a-a9d0-527cdbca82d0<br>Company Name: Exxon Mobil Corporation | [redacted]<br>Signature Adoption: Pre-selected Style<br>Using IP Address: 158.26.65.171 | Sent: 12/3/2020 11:15:28 AM<br>Viewed: 12/7/2020 9:39:33 AM<br>Signed: 12/7/2020 9:40:31 AM |
| [redacted]<br>ExxonMobil General<br>Security Level: Email, Account Authentication (None)<br><br>**Electronic Record and Signature Disclosure:**<br>Accepted: 9/15/2020 11:21:31 AM<br>ID: 9344b419-20d2-4486-8d6a-860b78c3868f<br>Company Name: Exxon Mobil Corporation | [redacted]<br>Signature Adoption: Pre-selected Style<br>Using IP Address: 158.26.2.166 | Sent: 12/3/2020 11:15:28 AM<br>Viewed: 12/3/2020 11:16:53 AM<br>Signed: 12/3/2020 11:19:39 AM |
| [redacted]<br>Security Level: Email, Account Authentication (None)<br><br>**Electronic Record and Signature Disclosure:** | [redacted]<br>Signature Adoption: Pre-selected Style<br>Using IP Address: 158.26.65.171 | Sent: 12/3/2020 11:15:27 AM<br>Viewed: 12/3/2020 11:15:48 AM<br>Signed: 12/3/2020 11:15:57 AM |

| Signer Events | Signature | Timestamp |
|---|---|---|
| Accepted: 11/4/2020 6:14:32 AM<br>ID: 5c8eac60-bc41-400b-9784-ba1ba3e89a1a<br>Company Name: Exxon Mobil Corporation | | |
| [redacted]<br>EMPC<br>Security Level: Email, Account Authentication (None) | [redacted]<br>Signature Adoption: Pre-selected Style<br>Using IP Address: 158.26.65.169 | Sent: 12/3/2020 11:15:27 AM<br>Viewed: 12/3/2020 2:48:25 PM<br>Signed: 12/12/2020 10:31:35 AM |
| **Electronic Record and Signature Disclosure:**<br>Accepted: 5/27/2020 11:11:39 AM<br>ID: 58c54b6e-196a-4f6e-9e65-d2dc9e73ae10<br>Company Name: Exxon Mobil Corporation | | |
| [redacted]<br>Hibernia Management & Development Company Ltd.<br>Security Level: Email, Account Authentication (None) | [redacted]<br>Signature Adoption: Uploaded Signature Image<br>Using IP Address: 158.26.65.166 | Sent: 12/3/2020 11:15:27 AM<br>Viewed: 12/4/2020 5:26:43 AM<br>Signed: 12/4/2020 5:31:20 AM |
| **Electronic Record and Signature Disclosure:**<br>Accepted: 5/19/2020 5:21:20 AM<br>ID: 242ea5db-b3b3-4b37-97e1-b1bdc3550216<br>Company Name: Exxon Mobil Corporation | | |
| [redacted]<br>Security Level: Email, Account Authentication (None) | [redacted]<br>Signature Adoption: Pre-selected Style<br>Using IP Address: 158.26.65.169 | Sent: 12/3/2020 11:15:28 AM<br>Viewed: 12/3/2020 12:45:50 PM<br>Signed: 12/3/2020 1:02:17 PM |
| **Electronic Record and Signature Disclosure:**<br>Accepted: 10/10/2019 1:04:03 PM<br>ID: 22749211-76dd-47a2-82ac-f9356d48ad09<br>Company Name: Exxon Mobil Corporation | | |

| In Person Signer Events | Signature | Timestamp |
|---|---|---|

| Editor Delivery Events | Status | Timestamp |
|---|---|---|

| Agent Delivery Events | Status | Timestamp |
|---|---|---|

| Intermediary Delivery Events | Status | Timestamp |
|---|---|---|

| Certified Delivery Events | Status | Timestamp |
|---|---|---|

| Carbon Copy Events | Status | Timestamp |
|---|---|---|

| Witness Events | Signature | Timestamp |
|---|---|---|

| Notary Events | Signature | Timestamp |
|---|---|---|

| Envelope Summary Events | Status | Timestamps |
|---|---|---|
| Envelope Sent | Hashed/Encrypted | 12/3/2020 11:15:28 AM |
| Certified Delivered | Security Checked | 12/3/2020 12:45:50 PM |
| Signing Complete | Security Checked | 12/3/2020 1:02:17 PM |

| Envelope Summary Events | Status | Timestamps |
| --- | --- | --- |
| Completed | Security Checked | 12/12/2020 10:31:35 AM |

| Payment Events | Status | Timestamps |
| --- | --- | --- |

| Electronic Record and Signature Disclosure |
| --- |

**ELECTRONIC RECORD AND SIGNATURE DISCLOSURE** Exxon Mobil Corporation (ExxonMobil) [1] uses the DocuSign service to collect signatures, endorsements, and approvals for corporate purposes. DocuSign may be used by ExxonMobil to conduct corporate business endorsements and approvals or to gather electronic signatures from 3rd parties for business purposes. Please read the information below and if you can access this information electronically to your satisfaction and agree to these terms and conditions, please confirm your agreement by clicking the 'I agree' button.
**Acknowledging your access and consent to receive materials electronically** By checking the 'I agree' box, I confirm that:

- I can access and read this Electronic CONSENT TO ELECTRONIC RECEIPT OF ELECTRONIC RECORD AND SIGNATURE DISCLOSURES document; and
- I can print on paper the disclosure or save or send the disclosure to a place where I can print it, for future reference.
- I am authorized to do the specific type of work (approve, endorse, etc.) in the country where I am physically located when using DocuSign

**Getting paper copies** You will have the ability to download and print documents we send to you through the DocuSign system during and immediately after signing the document.
**How to contact Exxon Mobil Corporation:** For email address changes or if you have questions about a document you receive please contact the sending ExxonMobil Business organization.
[1] ExxonMobil and/or ExxonMobil Affiliates mean (a) Exxon Mobil Corporation or any parent of Exxon Mobil Corporation, (b) any company or partnership in which Exxon Mobil Corporation or any parent of Exxon Mobil Corporation now or hereafter, directly or indirectly (1) owns or (2) controls, more than fifty per cent (50%) of the ownership interest having the right to vote or appoint its directors or functional equivalents ("Affiliated Company") and (c) any joint venture in which Exxon Mobil Corporations, any parent of Exxon Mobil Corporation or an Affiliated Company has day to day operational control.